TITLE: ENVISAT-1 PRODUCTS SPECIFICATIONS

VOLUME 14: RA-2 PRODUCTS SPECIFICATIONS

WRITTEN BY: Michela Sunda

(signature / date)

CHECKED BY: (Altimetry Team) _____

APPROVED BY: Pierre Féménias (EOP-GQ) _____

AUTHORISED BY: Pascal Lecomte (EOP-GQ) _____

DOCUMENT CATEGORY: [7] Approval [ ] Review [ ] Information

ESA APPROVAL:

SUMMARY: This document specifies the ENVISAT-1 products.

THIS PAGE INTENTIONALLY LEFT BLANK

ISSUE	REVISION	DATE	CHANGE STATUS	ORIGIN
1	A	12/01/96	Issue 1	
1	B	16/02/96	SCR #16, CR #16 Issue 1, Revision B Reason for Change: Updated to reflect information in PO-TN-ESA-GS-0381 and to address RIDs of Feb. 2/96 pertaining to the Level 0 structure. MPH, SPH, DSD, and DSR structures modified. Table added showing generalized Level 0 product structure. RIDs Addressed: ESA/0001: FEP header defined ESA/0002: PF-Host time stamp clarified ESA/0004: Processing PCD added ESA/0006: AF PCD ADS and DSD added ESA/0007: page A-3 updated ESA/0008: page B-3 updated ESA/0009: Table 8.1.1 modified ESA/0011: TBD changed to Range/ Doppler	

ISSUE	REVISION	DATE	CHANGE STATUS	ORIGIN
			ESA/0013: FEP header defined ESA/0014: Table 8.4.7.4-2 corrected CSF/1: filename in MPH corrected CSF/2: page A-3 updated CSF/3: MPH PCD information updated CSF/5: DSD added to Level 0 SPH CSF/6: Section on AATSR updated and re-issued CSF/8: AATSR_O Summary Sheet updated	
1	C	04/04/96	SCR #38, CR #38 Issue 1, Revision C Reason for Change: Updated Sections 1-6, 17 and Annex A to reflect changes discussed at the Products Review Meeting #1, March 5-8, 1996, as per action item "AI MDA 6 April 96" from PO-MN-ESA-00416, Pg. 35.	Products Review Meeting #1
2	A	20/05/96	SCR #71, CR #71 Issue 2 Reason for Change: Separate volume created. Updated with new product information from Document A-3.	

ISSUE	REVISION	DATE	CHANGE STATUS	ORIGIN
2	B	10/02/97	SCR #102, CR #102 Issue 2, Revision B Reason for Change: Product Data Set definitions provided for products for which information is available.	Products Review Meeting #2

ISSUE	REVISION	DATE	CHANGE STATUS	ORIGIN
2	C	17/03/97	SCR #145, CR #145 Issue 2, Revision C Reason for Change: Updated due to new release of the Level 2 IODD document. Differences from the structures of documents R-30 Issue 3, R-31 Issue 3, and R-38 Issue 2 Level 1B: • Some SPH keywords modified to reduce SPH size and improve clarity • Quality flags and thresholds added SPH as per convention defined at Products Review Meeting #2 • File name list in body of level 1B SPH moved to DSDs • DSD list updated to reflect all auxiliary data • Quality indicator flags added to MDSRs to conform to ENVISAT standard • Main MDSR size estimate corrected due to changed sizes in fields 57-59 (sl is 4 bytes, not 2 bytes) • MWR MDSR updated to account for discrepancies between documents R-30 and R-38	

ISSUE	REVISION	DATE	CHANGE STATUS	ORIGIN
			Level 2: • SPH keywords modified to reduce SPH size • Threshold information added to SPH • DSD list updated to reflect auxiliary data to be used in current PDS baseline • Quality flags and thresholds added to SPH • Quality flags added to MDSRs to conform to PDS standards • ECMWF files consolidated into 1 file as per DDR minutes PO-MN-CSF-GS-1416 • Orbit state vectors consolidated into 1 file Auxiliary Data: • All files given standard auxiliary data SPH • Parameters formerly in SPH moved to “General GADS” • All “Map” type files updated to lat/long positions corresponding to PDS standard lat/long conventions as described in Volume A • ADSRs changed to GDSRs as ADSR time stamp and attachment flag is not useful • Constants Auxiliary data file removed, along with references to it in the Level 2 SPH • Threshold information added to processing configuration files for RA2 and MWR	

ISSUE	REVISION	DATE	CHANGE STATUS	ORIGIN
3	A	15/10/97	SCR #169, CR #169 Issue 3, Revision A Reason for Change: Updated as per the red-marked copy provided by Thomson-CSF at Products Review Meeting #4, and per faxes DPD/JMJ/ENV, 2585/97, DPD/JMJ/ ENV, 2684/97, DPD/JMJ/ENV, 2668/ 97, and DPD/JMJ/2745/97.	Products Review Meeting #4
3	B	20/03/98	SCR #169, CR #169 Issue 3, Revision B Updated for the following SPRs: SPR-42000-0118-CSF to SPR-42000-0151-CSF, and SPR-42000-0157-CSF.	
3	C	19/11/98	SCR #218, CR #218 Issue 3, Revision C Updated for the following SPRs: SPR-42000-0171-CSF to SPR-42000-0178-CSF.	
3	D	30/10/99	Updated for the following SPRs: SPR-42000-0258-CSF to SPR-42000-0263-CSF, and SPR-42000-0277-CSF to SPR_42000-0283-CSF.	

ISSUE	REVISION	DATE	CHANGE STATUS	ORIGIN
3	E	20/9/2000	Updated in line with RA2 Algo spec Level 1b TN/RAS/0018/ALS issue 9 and RA2 Level 2 IODD PO-ST-RA-0005-CLS issue 5.2 Also include modif. from ESA tech note RA-TN-ESR-GS-0019 issue 1.2	PDS V3
3	F	01/02/01	SCR #169, CR #169 Issue 3, Revision F Reason for Change: To conform to "L1b RA2 DPM iss.9" and "CLS IODD iss.5.2" resumed into the technical note ESR-RA-0024: "Evolutions on Prod. Spec. Vol. 14 iss. 3E" (fax of the 30/01/01).	
3	G	30/03/01	typo in table 14.6.10.1.9-1 RA2_SOI_AX Node A34 GADS Format. Field 20, unit becomes kg.m-2	
		14/06/01	typos detailled in PO-TN-ESR-RA-0034? from 25 may 2001, "evolutions on prod. spec. Vol14 3F"	
		20/09/01	Correction according to SPR-100H0-0874-ESA.	
		26/09/01	The reference to old MWG product is removed.	
3	H	12/02/02	Corrections applied according to PO-TN-ESR-RA-0034 Issue 1.6 (18 October 2001)	

ISSUE	REVISION	DATE	CHANGE STATUS	ORIGIN
			Updated table 14.4.1.2-1 to conform to L2 CLS IODD iss. 5.2 (section 4.2.18) Corrected typo in table 14.4.1.7.3-1 to match SPR-ALS-RA2-L1b-029 on RA2 L1b DPM, iss. 9 Modified table 14.4.1.7.1-3 (MCD flag) according to L1b RA2 DPM iss.9 Modified table 14.5.1.6-1 to match SPR-CLS-RA2-L2-015 on CLS L2 DPM iss. 3.2	
			Modified table 14.5.1.7.1-1 according to CLS IODD iss. 5.2 and CLS DPM iss. 3.2 to match the IPF NRT and F-PAC OFL L2 output products. Modification in table 14.5.3.6 (SPH for Wind/Wave product) according to the notes in CLS IODD iss.5.4 Modification in section 14.6.6 according to CLS IODD iss. 5.2 Modification in section 14.6.10 file size and table in section 14.6.10.1; added new section (14.6.10.1.8-1) for Node 32 and table 14.6.10.1.8-1 (RA2_SOI_AX Node 32 GADS Format), modified tables 14.6.10.1.9-1, 14.6.10-1 and 14.6.10.1.11-1 to match SPRs raised on CLS IODD iss	

ISSUE	REVISION	DATE	CHANGE STATUS	ORIGIN
			5.2 (tables 7.13, B1.7, B1.8 and B1.9) Corrected typo in table 14.6.10.1.9-1 according to CLS IODD iss. 5.2 (table B1.8) Inserted new field (number 8) in table 14.6.11.1.1-1 to match SPR-ALS-MWR-L1b-030 on L1b RA2 and MWR DPMs Modified: section 14.6.16 and table 14.6.16.1.2-1 section 14.6.17, 14.6.17.1.2 and table 14.6.17.1.2-1 section 14.6.18 and table 14.6.18.1.2-1 according to update of CLS IODD iss.5.22 Modified table 14.6.23.1.2-1 to match SPR-ALS-MWR-L1b-026 on MWR L1b DPM iss. 10	
3	I	3/07/2002	Modified table 14.6.25.1-1 to match SPR-ALS-MWR-L1b-025 and SPR-ALS-MWR-L1b-029 on MWR L1b DPM iss. 10 Modified section 14.6.26 according to Update of CLS IODD iss 5.2 Corrected typo in section 14.6.29 Corrected table 14.5.1.6-1, definition for AVERAGE_GLOBAL_PRESSURE	

ISSUE	REVISION	DATE	CHANGE STATUS	ORIGIN
3	J	3/07/2003	Corrected comments in section 14.6.6 Table 14.6.6.1.2-1 Updated RA2_SOI_AX updated (Section 14.6.10 Tables updated: 14.6.10.1.1-1 14.6.10.1.2-1 14.6.10.1.3-1 14.6.10.1.4-1 14.6.10.1.5-1 14.6.10.1.7-1 14.6.10.1.8-1 14.6.10.1.9-1 14.6.10.1.10-1 14.6.10.1.11-1 14.6.10.1.12-1 Corrected comment in section 14.6.16 Corrected comment in section 14.6.17 Updated table 14.6.17.1.2-1 Corrected comment in section 14.6.18 Updated table 14.6.18.1.2-1	PO-ST-RA-0005-CLS (Level2 IODD V5 rev 6)

ISSUE	REVISION	DATE	CHANGE STATUS	ORIGIN
3	K	24/5/2004	Added SPH field on level2 products, added different MCD flags specification for OFL products. Tables updated: 14.5.1.6-1 (rows 7b and 8 affected) 15.5.1.7.1-2 (specfied for NRT products) 15.5.1.7.1-3 (added for OFL products, with different definitions for bits 28-31 for Orbital processing status)	Changes to OFL CMA processor: CR: 012/ 2003 and 013/2003

ISSUE	REVISION	DATE	CHANGE STATUS	ORIGIN
3	L	31/3/2005	Table 14.4.1.7.1-3 MCD bits 0-1 defined Table 14.4.1.7.4-2 Bit Coding (MWR Measurement Confidence data) Table 14.5.1.2-1 Aux data list, added RA2_TLG_AX Table 14.5.1.6-1 Level2 SPH DSD(R) list added entry to include new aux data Table 14.5.1.7.1-1Level2 MDSR several fields updated + renumbering Table 14.5.1.7.2-1 MCD Flags coding Table 14.5.3.7.1-1 Meteo Product MDSR from field 31 changed. Table 14.6.1.1-1 Fields 38-40 changed Chapter 14.6.2 Changed size of file Table 14.6.2.1-1 Field 5 changed, size changed Chapter 14.6.3 Changed size of file Table 14.6.3.1-1 fields from 34 to end changed, size modified. Table 16.6.10.1.3-1 RA2_SOI file Node A21 Gads updated Table 14.6.10.1.10-1 RA2_SOI file Node A34 Gads updated Table 14.6.10.1.12-1 RA2_SOI file Node A41 Gads updated New Chapter 14.6.18 for new aux data (RA2_TLG_AX) Table 14.6.26.1-1 MWR Secondary lobe temp. file gads. All changes not reported here are treaceable with change bars.	Changes as per ENVI_RA2_CR_0085 TNO/RAS/0010/ALSIS.12 PO-ST-RA-0005-CLS5rev7 PO-ST-RAA-0006-CLS3rev6

ISSUE	REVISION	DATE	CHANGE STATUS	ORIGIN
3	M	24/10//2005	Conversion from Framemaker to Word format. Table 14.5.1.6-2, page 77, ASCII Strings for DS_NAME Fields, inclusion of 'solution 1' and 'solution 2' in the DSD name; Table 14.5.1.7.1-1 pag. 80, fields 32, 32bis Units correction ($10x10^{-6}$deg instead of 10^{-6}deg); pag. 80, fields 32, 32bis description update (added the string "[20]" for consistency with similar fields); pag.80 field 51, The IMAR product has be removed from the text description; pag 81 fields 63, 64 units typo correction; pag 83 Fields 91, 92 description typos correction; pag 83 Fields from 105 to 114 upward shifted; pag 84 Field 104 becomes new field 114; Table 14.5.1.7.1-4 Pag. 91 Bit 7 used for "s-band anomaly flag"; Table 14.5.3.7.1-1 pagg.106 Fields 32,33 data type change from ss to sl, dimension change from 2 to 1;	Changes requested by P.Femenias by email

ISSUE	REVISION	DATE	CHANGE STATUS	ORIGIN
			pag. 106 Field 34 dimension change from 2 to 1; pag. 107 Field 35 dimension change from 2 to 1; pag. 108 Fields from 61 to 70 upward shifted; Pag. 108 Field 60 becomes new field 70;	
3	N	05/06/2006	RA2_CON_AX Field 18, 19 Default reference for Side-B modified from “1” to “3” RA-2 USO Frequency File GADS Format Field 6 value is 3 for chain B RA-2 IF Mask File GADS Format Field 7 value is 3 for chain B	OAR-2372
3	O	21/12/2006	Table 14.5.1.7.1-4 Definition of Flags in the RA2 Instrument Flags Field Bit 7 is a spare. Table 14.6.2.1-1 RA-2 USO Frequency File GADS Format Field 6 corrected with “no USO Cal": 1 (01b) and "Chain A": 0 (00b).	

ISSUE	REVISION	DATE	CHANGE STATUS	ORIGIN
4	A	13/05/2008	Modified size and structure of MWR_CHD_AX; Modified structure of RA2_CON_AX (size unchanged); Modified L1b structure; Modified L2 structure; See register of changes for details	Changes as per: MWR-DPM-IODD: CLS-DOS-NT-07-148 14rev0, LOP-IODD: CLS.DOS/ NT/96.040 Issue 5 rev 8 PO-ST-RA-0005-CLS LIP-IODD: 12133/96/N L/GS-IODD v3.4 DPM L1b USO: ISARD_ES A_L1B_ES L_USO_DP M_011 4.a, DPM L1b SWR: ISARD_ES A_L1BESL

ISSUE	REVISION	DATE	CHANGE STATUS	ORIGIN
				_SWR_DPM_012_v1c
4	B	03/10/2008	Table 14.6.1.1-1 RA-2 Processor Configuration File GADS Format Change of units of the Step parameter in the CON file, from seconds to SP Modification of the Smoothing factor units, from 10-6ps to 10-7ps Table 14.4.1.7.1-1 RA2 Main MDS MDSR Format Field 67 USO_correction_quality_flag8 data type changed Table 14.5.1.7.1-1 Level 2 RA-2 MDSR The record length of field 154 is changed from 6 bytes to 1 byte. The new 5 fields (Sea ice flag, Membership 1, Membership 2, Membership 3, Membership 4) have been added (with length equal to1 byte) by using 5 of the 6 bytes of the spare field. The total size is not changed but the length of the last Spare field is decreased from 6 byte to 1 byte. Pag. 58 Note 8 referred to field#67 instead of field#65.	Changed as per: DPM L1b USO: ISARD_ESA_L1B_ESL_USO_DPM_011, 5a

ISSUE	REVISION	DATE	CHANGE STATUS	ORIGIN
4	C	30/01/2009	Paragraph 14.6.19 and table 14.6.19.1.2-1 Update/Correction of the tidal wave frequencies (FES-2004 - SCP_095) : change of grid step Paragraph 14.6.17: correction of the last longitude value is 179.875 instead of 179.5	Changed as per: IODD CLS 5/10

REGISTER OF CHANGES

Affected pages:

Vol 14/4C

Paragraph 14.6.19 Change of grid step for tidal loading calculation (solution 2)

Table 14.6.19.1.2-1 Change of coefficient B1 and B2 for tide wave 11 and Total Size

Vol 14/4B

Table 14.4.1.7.1-1 RA2 Main MDS MDSR Format

Field 67 USO_correction_quality_flag8 data type changed

Table 14.4.1.7.1-1 Note 8 referred to 67 field instead of 65.

Table 14.5.1.7.1-1 Level 2 RA-2 MDSR

The record length of field 154 is changed from 6 bytes to 1 byte.

Table 14.6.1.1-1 RA-2 Processor Configuration File GADS Format

Change of units of the Step parameter in the CON file, from seconds to SP

Modification of the Smoothing factor units, from 10-6ps to 10-7ps

Vol 14/4A

Par. 14.4.1.3, added “USO Correction” in bullet list.
Table 14.4.1.7.1-1 RA2 Main MDS MDSR Format
added fields 25, 26, 66 and 67.
Level 2 RA-2 MDSR
modified description of fields 91 and 92;

added fields from 149 to 153 and moved the spare to position 154.
added “note 5” to fields 147;
added “note 6” to field 149;
Table 14.5.1.7.1-6 Definition of Rain Flag
table added.
Table 14.5.1.7.1-7 Definition of Sea Ice Flag.
table added.
Meteo Product MDSR
modified description of fields 52 and 53;
RA-2 processor Configuration File GADS Format
added fields from 40 to 43 and shifted the spare.
RA2_SOI_AX Node A33 GADS Format
modified description of fields from 10 to 16, wave number now spans from 1 to 29.
Reduced the size of the spare to keep the GADS size.
RA2_SOI_AX Node A34 GADS Format
increased number of values for field 3,
added fields fom 71 to 82 and shifted the spare.
Par. 14.6.16, “height” corrected as “eight” (principal tide waves).
Par. 14.6.17, rectified the number of tide waves that is now eleven; Updated the reference model; changed the resolution of the grid;
Table 14.6.17.1.2-1 RA2 OT2 AX Grid Data GADSR Format,
Updated with eleven tide waves.
Par. 14.6.9, rectified the number of tide waves that is now eleven;
Table 14.6.19.1.2-1 RA2 TLD AX Grid Data GADSR Format,
Updated with eleven tide waves.
Par. 14.6.24, size and structure of CHD_AX updated;
Table 14.6.24.1.4-1 MWR CHD AX Characterization GADS Format
Updated size of fileds #1 and #2.
Table 14.6.24.1.4-2 mwr mode info nominal structure
Updated size.
>>New<< Table 14.6.24.1.4-3 mwr mode info redudant structure
>>New<< Table 14.6.24.1.4-5 mwr drift info structure

Vol 14/3O

Pag. 92 Table 14.5.1.7.1-4 Definition of Flags in the RA2 Instrument Flags Field
Bit 7 is a spare.

Pag. 118 Table 14.5.3.7.1-1 RA-2 USO Frequency File GADS Format
Field 6 corrected with “no USO Cal": 1 (01b) and "Chain A": 0 (00b).

Vol 14/3N

RA2_CON_AX
Field 18, 19
Default reference for Side-B modified from “1” to “3”

RA-2 USO Frequency File GADS Format
Field 6 value is 3 for chain B

RA-2 IF Mask File GADS Format
Field 7 value is 3 for chain B

TABLE OF CONTENTS

14 RA-2 PRODUCTS SPECIFICATIONS 29

14.1 INSTRUMENT OVERVIEW 29

14.2 PRODUCTS OVERVIEW 31

14.3 LEVEL 0 PRODUCTS 33

14.3.1 RA-2 Measurement Mode Level 0 33
14.3.2 RA-2 IF Calibration and BITE Mode Level 0 33
14.3.3 MWR Level 0 33
14.3.4 Input Data 33
14.3.5 Auxiliary Data Used 34
14.3.6 Processing Performed 34
14.3.7 Product Structure 34

14.4 LEVEL 1B PRODUCTS 35

14.4.1 RA-2 Geolocated and Calibrated Altimeter Waveforms with TOA Microwave Brightness Temperatures 35

14.5 LEVEL 2 PRODUCTS 68

14.5.1 RA-2 Geophysical Data Record 68
14.5.2 RA-2 Sensor Data Record 114
14.5.3 RA-2 Wind/Wave Product for Meteo Users 122

14.6 AUXILIARY DATA FILES 136

14.6.1 RA2 Level 1B Processor Configuration File 136
14.6.2 USO Frequency Measured on Ground 141
14.6.3 RA2 Instrument Characterization Data 142
14.6.4 RA2 IF Mask Data File 148
14.6.5 Ionospheric Coefficients File 150
14.6.6 Mean Sea Surface 151
14.6.7 Solar Activity Data File 154
14.6.8 Pole Location Data File 156
14.6.9 Platform Data File 157
14.6.10 Ocean / Ice2 Configuration (System) File 158
14.6.11 RA2 Constants Data File 178
14.6.12 Ice1 / Sea Ice Configuration (System) File 180
14.6.13 Sea State Bias Table File 182
14.6.14 Modified Dip Map File 185

14.6.15 Cartwright Amplitudes File 187
14.6.16 Ocean Tide Solution 1 Map File 190
14.6.17 Ocean Tide Solution 2 Map File 192
14.6.18 Tidal Loading Coefficients Map File (Solution 1) 194
14.6.19 Tidal Loading Coefficients Map File (Solution 2) 196
14.6.20 Geoid Height File 199
14.6.21 Ocean Depth/Land Elevation File 200
14.6.22 RA2 Slope Model for Greenland Data File 200
14.6.23 RA2 Slope Model for Antarctica Data File 203
14.6.24 MWR Instrument Characterization Data 203
14.6.25 MWR Processor Configuration File 212
14.6.26 MWR Secondary Lobe Temperature File 213
14.6.27 MWR Land/Sea Flag Table File 217
14.6.28 Altitude of Meteorological grid points File 219
14.6.29 ECMWF Data Files 221
14.6.30 Orbit State vectors 221
14.6.31 ENVISAT-1 Attitude Data File 221

14.7 PRODUCT SUMMARY SHEETS 223

LIST OF FIGURES

Figure 14.2-1 RA-2 Product Tree..... *32*

LIST OF TABLES

Table 14.4.1.7.1-1 RA-2 Characteristics *29*
Table 14.4.1.7.1-1 RA-2 Products *31*
Table 14.4.1.7.1-1 Auxiliary Data Files for RA-2 Level 1B Processing *36*
Table 14.4.1.7.1-2 Auxiliary Data Files for RA-2 Level 1B Processing *36*
Table 14.4.1.7.1-1 RA-2 Level 1B Product Structure *37*
Table 14.4.1.7.1-1 RA-2 Level 1B – SPH *38*
Table 14.4.1.7.1-2 ASCII Strings for DS_NAME Fields *50*
Table 14.4.1.7.1-1 RA2 Main MDS MDSR Format *51*
Table 14.4.1.7.1-2 Definition of Instrument Operations Flags *55*
Table 14.4.1.7.1-3 Definition of Level 1B Measurement Confidence Flags *57*
Table 14.4.1.7.2-1 Level 1B Burst Waveforms MDSR *60*
Table 14.4.1.7.4-1 Level 1B/2 MWR MDSR *62*
Table 14.4.1.7.4-2 Definition of MWR Measurement Confidence Data Field *65*
Table 14.4.1.7.4-3 Definition of MWR Instrument Flags Field *66*
Table 14.4.1.7.4-1 Auxiliary Data Files for RA-2 Level 2 Processing *69*
Table 14.4.1.7.4-1 Level 2 FGDR/IGDR/GDR Product Structure *71*
Table 14.4.1.7.4-1 RA-2 Level 2-SPH *72*
Table 14.4.1.7.4-2 ASCII Strings for DS_NAME Fields *90*
Table 14.5.1.7.1-1 Level 2 RA-2 MDSR *93*
Table 14.5.1.7.1-2 Definition of Flags in the MCD Field for NRT products *104*
Table 14.5.1.7.1-3 Definition of Flags in the MCD Field for OFL products *107*
Table 14.5.1.7.1-4 Definition of Flags in the RA2 Instrument Flags Field *110*
Table 14.5.1.7.1-5 Definition of Flags in the Interpolation Flags Field *110*
Table 14.5.1.7.1-6 Definition of Rain Flag *111*
Table 14.5.1.7.1-7 Definition of Sea Ice Flag *112*
Table 14.5.1.7.2-1 Level 2 SGDR Product Structure *114*
Table 14.5.1.7.2-1 RA-2 Level 2 SDR - SPH *115*
Table 14.5.2.7.3-1 18-Hz Waveforms MDSR *119*
Table 14.5.2.7.3-2 Format of block_info Structure *120*
Table 14.5.2.7.4-1 RA-2 Level 2 Wind/Wave - SPH *123*
Table 14.5.3.7.1-1 Meteo Product MDSR *127*
Table 14.5.3.7.1-1 RA-2 Processor Configuration File GADS Format *137*
Table 14.5.3.7.1-1 RA-2 USO Frequency File GADS Format *142*
Table 14.5.3.7.1-1 RA-2 Instrument Characterization File GADS Format *143*
Table 14.5.3.7.1-1 RA-2 IF Mask File GADS Format *149*
Table 14.6.5.1.1-1 RA2_IOC_AX Grid Data GADSR Format *151*
Table 14.6.6.1.1-1 RA2_MSS_AX General GADS Format *152*

Table 14.6.6.1.2-1 RA2_MSS_AX Grid Data GADSR Format *154*
Table 14.6.7.1.1-1 RA2_SOL_AX GADSR Format *155*
Table 14.6.8.1.1-1 RA2_POL_AX GADSR Format *157*
Table 14.6.9.1.1-1 RA2_PLA_AX GADSR Format *158*
Table 14.6.10.1.1-1 RA2_SOI_AX Node A11 GADS Format *160*
Table 14.6.10.1.2-1 RA2_SOI_AX Node A12 GADS Format *160*
Table 14.6.10.1.3-1 RA2_SOI_AX Node A21 GADS Format *161*
Table 14.6.10.1.4-1 RA2_SOI_AX Node A22 GADS Format *163*
Table 14.6.10.1.5-1 RA2_SOI_AX Node A24 GADS Format *166*
Table 14.6.10.1.7-1 RA2_SOI_AX Node A31 GADS Format *167*
Table 14.6.10.1.8-1 RA2_SOI_AX Node A32 GADS Format *169*
Table 14.6.10.1.9-1 RA2_SOI_AX Node A33 GADS Format *169*
Table 14.6.10.1.10-1 RA2_SOI_AX Node A34 GADS Format *171*
Table 14.6.10.1.11-1 RA2_SOI_AX Node A35 GADS Format *177*
Table 14.6.10.1.12-1 RA2_SOI_AX Node A41 GADS Format *178*
Table 14.6.11.1.1-1 RA2_CST_AX GADS Format *179*
Table 14.6.12.1.1-1 RA2_ICT_AX GADS Format *181*
Table 14.6.13.1.1-1 RA2_SSB_AX General GADS Format *183*
Table 14.6.13.1.2-1 RA2_SSB_AX Grid Data GADSR Format *185*
Table 14.6.14.1.2-1 RA2_DIP_AX Grid Data GADSR Format *187*
Table 14.6.15.1.1-1 RA2_SET_AX General GADS Format *188*
Table 14.6.15.1.2-1 RA2_SET_AX Grid Data GADSR Format *189*
Table 14.6.16.1.2-1 RA2_OT1_AX Grid Data GADSR Format *191*
Table 14.6.17.1.2-1 RA2_OT2_AX Grid Data GADSR Format *193*
Table 14.6.18.1.2-1 RA2_TLG_AX Grid Data GADSR Format *196*
Table 14.6.19.1.2-1 RA2_TLD_AX Grid Data GADSR Format *198*
Table 14.6.20.1.2-1 RA2_GEO_AX Grid Data GADSR Format *200*
Table 14.6.22.1.1-1 RA2_SL1_AX General GADS Format *201*
Table 14.6.22.1.2-1 RA2_SL1_AX Slopes GADSR Format *202*
Table 14.6.24.1.1-1 MWR_CHD_AX Thermistor Polynomial GADS Format *205*
Table 14.6.24.1.2-1 MWR_CHD_AX Thermistor Limits GADS Format *205*
Table 14.6.24.1.3-1 MWR_CHD_AX Receiver GADS Format *207*
Table 14.6.24.1.4-1 MWR_CHD_AX Characterization GADS Format *207*
Table 14.6.24.1.4-2 mwr_mode_info_nominal Structure *208*
Table 14.6.24.1.4-3 mwr_mode_info_redundant Structure *209*
Table 14.6.24.1.4-4 mwr_char_info Structure *210*
Table 14.6.24.1.4-5 mwr_drift_info Structure *211*
Table 14.6.24.1.4-1 MWR Processor Configuration File *213*
Table 14.6.24.1.4-1 MWR Secondary Lobe Temperature File GADS Format *214*
Table 14.6.27.1.2-1 MWR_LSF_AX Data GADSR Format *219*
Table 14.6.28.1.1-1 RA2_MET_AX Grid Data GADS Format *220*

THIS PAGE INTENTIONALLY LEFT BLANK

14 RA-2 PRODUCTS SPECIFICATIONS

14.1 INSTRUMENT OVERVIEW

The Radar Altimeter-2 measures with high precision the distance from the satellite to the closest point on the Earth's surface directly beneath it. If the orbit of the satellite is determined by independent means (such as by DORIS) the RA-2 data can be used to accurately map the Earth's topography. In addition, signal analysis of the returning radar echo can be used to provide insight into ground characteristics.

The RA-2 is a nadir looking pulse limited radar operating at a nominal frequency of 13.575 GHz (Ku-band). A second channel, operating at a nominal frequency of 3.2 GHz (S-band) is also used, primarily to estimate the effects of the ionosphere on the Ku-band channel.

Table 14.4.1.7.1-1 RA-2 Characteristics

GEOMETRIC:	Approx. 19 km footprint. Spatial sampling approx. 390 meters along track. 47 cm height resolution at 320 MHz max chirp bandwidth.
RADIOMETRIC:	Nadir looking pulse: Main Nominal frequency = 13.575 GHz (Ku-band) Error Nominal frequency = 3.2 GHz (S-band)

The RA-2 Instrument operates in three modes. These consist of Measurement Mode, RF and Digital Built-In Test Equipment (BITE) Mode, and IF Calibration Mode. Science data is gathered within the Measurement Mode, while the other modes are used for testing and calibration of the instrument.

1. Measurement Mode

The Measurement Mode consists of two primary phases. The first is Acquisition Phase, when the instrument attempts to locate the initial ground height. To do this, the instrument first initiates a Noise Power Estimation cycle to establish a noise power estimate, then proceeds with a Detection cycle in which the location of the leading edge of the return echo is established. The final step in the Acquisition Phase is the Automatic Gain Control (AGC) Setting cycle in which attempts to estimate the received signal power in order to set the appropriate gain settings to keep the return signal amplitude within the proper dynamic range of the receiving equipment.

The second step of Measurement Mode is the Tracking Phase, in which the instrument acquires the science data. The transition from Acquisition to Tracking phases is performed automatically or started directly by macrocommand. During tracking it is possible to change tracking parameters without interruption of measurements. Periodic calibration is also performed while in the Tracking Phase of Measurement Mode. Operational products are constructed from the data obtained when the instrument is in the Tracking Phase of Measurement mode.

2. RF and Digital BITE Mode

The aim of these two modes is to test the RF Tx/Rx channel and the digital signal processing modules. BITE is executed from Measurement Mode by macrocommand. During BITE the tracking is interrupted. RF and Digital BITE are executed cyclically until a mode change request is received. Data generated while in this mode is included in Level 0 Products only.

3. IF Calibration Mode

The purpose of this mode is to measure the IF filter shape. This is done by measuring the spectra of averaged noise samples. Data generated while in this mode is included in Level 0 Products only.

14.2 PRODUCTS OVERVIEW

The RA-2 products are summarized in Table 14.2-1, and the product tree of Figure 14.2-1.

Table 14.4.1.7.1-1 RA-2 Products

Instrument / mode	Product ID	Description
RA-2	RA2_CAL_0P	RA2 Calibration and BITE Mode Level 0
	RA2_ME__0P	RA2 Measurement Mode Level 0
	RA2_MW__1P	Geolocated and calibrated Altimeter Waveforms with TOA Microwave Brightness Temperatures
	RA2_FGD_2P	FDGDR: Fast delivery Geophysical Data record from RA-2 and Water Vapour/Liquid Content from MWR. Available 3 hours after data acquisition
	RA2_IGD_2P	IGDR: Intermediate Geophysical Data record from RA2 and Water Vapour/Liquid Content from MWR. Processed off-line and available 3-5 days after acquisition
	RA2_GDR_2P	GDR: Geophysical Data Record from RA-2 and Water Vapour/Liquid Content from MWR. Processed off-line and available 50 days after acquisition
	RA2_WWV_2P	FDMAR/IMAR: Wind/Wave product with height and MWR information for NRT dissemination to Meteocean users (2 products released at different levels of consolidation: FDMAR built from RA2_FGD_2P or IMAR built from RA2_IGD_2P)
	RA2_MWS_2P	SGDR: Sensor Geophysical Data Record from RA-2, Water Vapour/Liquid content from MWR and Individual Uncalibrated Waveforms from RA-2. Available after 50 days from data take.

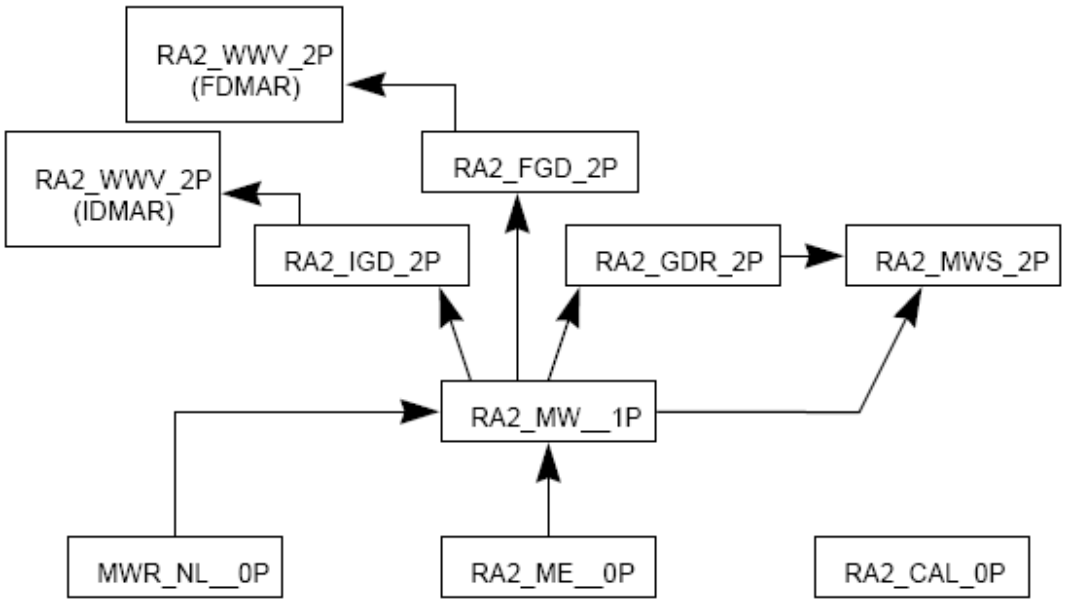

Figure 14.2-1 RA-2 Product Tree

14.3 LEVEL 0 PRODUCTS

There are two RA-2 Level 0 products: The Measurement Mode Level 0 and the IF Calibration and BITE Mode Level 0.

14.3.1 RA-2 Measurement Mode Level 0

This product contains annotated Instrument Source Packets (ISPs) in time ordered format as received from the ground station Front End Processor (FEP). Quality characteristics of the data, as calculated by the FEP are summarized in the product headers, and are also included in the annotation of the ISPs. The product is produced systematically. The NRT version is available from the PDHS 3 hours after data acquisition. The OFL (fully consolidated) version of the product is available from the LRAC. The product is intended to be archived, and is the basis of all further processing.

14.3.2 RA-2 IF Calibration and BITE Mode Level 0

This product contains time ordered AISPs acquired while the instrument is in IF Calibration or BITE Modes. The primary application of this data is instrument monitoring and calibration. The product is produced systematically. The NRT version is available from the PDHS 3 hours after data acquisition. The OFL (fully consolidated) version of the product is available from the LRAC. The product is intended to be archived, and is used as auxiliary data to support the creation of higher level products. No further PDS products are created directly from this product.

14.3.3 MWR Level 0

Refer to Volume 13.

14.3.4 Input Data

Annotated ISPs as received from the Front End Processor (FEP) plus auxiliary data.

14.3.5 Auxiliary Data Used

The Level 0 product requires the following auxiliary information (refer to Volume 6):

- Phase, cycle and orbit number data,
- ID of the systems and subsystem that collect and process the data,
- ENVISAT orbital state vectors,
- Processor Configuration file, which includes PCD error codes and threshold values, and
- SBT to UTC conversion data.

14.3.6 Processing Performed

The determination of the satellite position and conversion of Satellite Binary Time (SBT) to Universal Time Co-ordinates (UTC) is accomplished using ESA software. These are the only algorithms applied when forming the Level 0 product.

14.3.7 Product Structure

As defined in Volume 6. The detailed description of the Instrument Source Packets is contained in Document A-1.

14.4 LEVEL 1B PRODUCTS

There is one RA-2 Level 1B product: the Geolocated and Calibrated Altimeter Waveforms with TOA Microwave Brightness Temperatures product.

14.4.1 RA-2 Geolocated and Calibrated Altimeter Waveforms with TOA Microwave Brightness Temperatures

The Level 1B product is a conversion of the Level 0 product to calibrated engineering units. Steps in the processing include decoding the source packets from the Level 0 product, applying characterization and calibration data, computing the time-lag in UTC, and presenting the instrument measurements in engineering units. The level 1B product is the basis for all Level 2 product generation. It may also be available to users wishing to apply custom processing techniques to instrument corrected data. The product is produced systematically. The NRT version of the product is available from the PDHS 3 hours after data acquisition. The OFL (fully consolidated) version of the product is available from the LRAC 2 weeks after data acquisition. One OFL product corresponds to one half orbit, from pole to pole. One NRT product corresponds to approximately one orbit (data dumped at ground station).

14.4.1.1 Input Data

RA-2 Measurement Mode Level 0 product and MWR Level 0 product plus auxiliary data.

14.4.1.2 Auxiliary Data Used

Auxiliary data required includes:

Table 14.4.1.7.1-1 Auxiliary Data Files for RA-2 Level 1B Processing

Description	Auxiliary File ID
RA2 processor configuration file	RA2_CON_AX
RA2 USO frequency measured on ground	RA2_USO_AX
RA2 IF Mask File (inflight data)	RA2_IFF_AX

Table 14.4.1.7.1-2 Auxiliary Data Files for RA-2 Level 1B Processing

Description	Auxiliary File ID
RA2 IF Mask File (ground data for chain A)	RA2_IFA_AX
RA2 IF Mask File (ground data for chain B)	RA2_IFB_AX
RA2 instrument characterization data	RA2_CHD_AX
RA2 Constants file	RA2_CST_AX
MWR instrument characterization data	MWR_CHD_AX
MWR processor configuration file	MWR_CON_AX
MWR secondary lobe file	MWR_SLT_AX
Orbit state vectors file (one of the following)	DOR_NAV_0P AUX_FPO_AX AUX_FRO_AX DOR_POR_AX DOR_VOR_AX

14.4.1.3 Processing Performed

This document is not the applicable document regarding the algorithms used during processing. The information presented here is intended only as a high level overview.

The main processing steps performed at Level 1B consist of:

- Decoding of Level 0 data;
- Reading Auxiliary data files;
- Calibration data processing and datation;
- Science data processing and datation;
- Science data validation
- USO Correction
- output product generation.

14.4.1.4 Product Structure

The high level structure of the Level 1B product is shown below:

Table 14.4.1.7.1-1 RA-2 Level 1B Product Structure

MPH
Level 1B SPH
RA-2 Main MDS
RA-2 Burst Waveforms MDS
RA-2 PTR Data MDS
MWR MDS

14.4.1.5 Main Product Header

The MPH is described in Volume 5.

14.4.1.6 Specific Product Header

The SPH is an ASCII header and as such follows the ASCII conventions described in Volume 5. The content of the RA-2 Level 1B Specific Product Header shall be as follows.

Table 14.4.1.7.1-1 RA-2 Level 1B – SPH

N	Description	Units	Byte Length	Data Type	Dim.
1	**SPH_DESCRIPTOR=**	keyword	15	uc	15
	quotation mark (“)	-	1	uc	1
	SPH Descriptor, set to RA2_MWR_LEVEL1B. ASCII string describing the product. Unused characters set to the ascii blank space character.	-	28	uc	28
	quotation mark (“)	-	1	uc	1
	newline character	terminator	1	uc	1
	RA-2 Time Information				
2	**RA2_FIRST_RECORD_TIME=**	keyword	22	uc	22
	quotation mark (“)	-	1	uc	1
	UTC Time of first record in the RA2 Main MDS of this product.	UTC	27	uc	27
	quotation mark (“)	-	1	uc	1
	newline character	terminator	1	uc	1
3	**RA2_LAST_RECORD_TIME=**	keyword	21	uc	21
	quotation mark (“)	-	1	uc	1
	UTC Time of last record in the RA2 Main MDS of this product.	UTC	27	uc	27

Table 14.4.1.7.1-1 RA-2 Level 1B – SPH

N	Description	Units	Byte Length	Data Type	Dim.
	quotation mark (“)	-	1	uc	1
	newline character	terminator	1	uc	1
	RA-2 Positioning Information				
4	**RA2_FIRST_LAT=**	keyword	14	uc	14
	Geodetic Latitude of the first record in the RA2 Main MDS A negative value denotes south latitude, a positive value denotes North latitude	10^{-6} degrees	11	Al	1
	<10-6degN>	units	10	uc	10
	newline character	terminator	1	uc	1
5	**RA2_FIRST_LONG=**	keyword	15	uc	15
	Geodetic longitude of the first record in the RA2 Main MDS. Positive values East of Greenwich, negative values west of Greenwich	10^{-6} degrees	11	Al	1
	<10-6degE>	units	10	uc	10
	newline character	terminator	1	uc	1
6	**RA2_LAST_LAT=**	keyword	13	uc	13
	Geodetic Latitude of the last record in the RA2 Main MDS A negative value denotes south latitude, a positive value denotes North latitude	10^{-6} degrees	11	Al	1
	<10-6degN>	units	10	uc	10
	newline character	terminator	1	uc	1
7	**RA2_LAST_LONG=**	keyword	14	uc	14
	Geodetic longitude of the last record in the RA2 Main MDS	10^{-6} degrees	11	Al	1

Table 14.4.1.7.1-1 RA-2 Level 1B – SPH

N	Description	Units	Byte Length	Data Type	Dim.
	Positive values East of Greenwich, negative values west of Greenwich				
	<10-6degE>	units	10	uc	10
	newline character	terminator	1	uc	1
8	**Spare (blank characters)**	-	50	uc	50
	newline character	terminator	1	uc	1
	RA-2 Quality Information				
9	**RA2_PROC_FLAG=**	keyword	14	uc	14
	Processing errors significance flag 1 or 0 1 if the percentage of DSRs free of processing errors during SP data block processing is less than the acceptable threshold.	-	1	uc	1
	newline character	terminator	1	uc	1
10	**RA2_HEADER_FLAG=**	keyword	16	uc	16
	Header errors significance flag 1 or 0 1 if the percentage of DSRs free of processing errors during SP Headers processing is less than the acceptable threshold.	-	1	uc	1
	newline character	terminator	1	uc	1
11	**RA2_PROCESSING_QUALITY=**	keyword	23	uc	23
	Percentage of DSRs free of processing errors during the SP datablocks processing	10-2%	6	As	1

Table 14.4.1.7.1-1 RA-2 Level 1B – SPH

N	Description	Units	Byte Length	Data Type	Dim.
	<10-2%>	units	7	uc	7
	newline character	terminator	1	uc	1
12	**RA2_HEADER_QUALITY=**	keyword	19	uc	19
	Percentage of DSRs free of processing errors during the SP Headers processing	10-2%	6	As	1
	<10-2%>	units	7	uc	7
	newline character	terminator	1	uc	1
13	**RA2_PROC_THRESH=**	keyword	16	uc	16
	Minimum acceptable percentage of quality checks that must be passed during SP datablocks processing	10-2%	6	As	1
	<10-2%>	units	7	uc	7
	newline character	terminator	1	uc	1
14	**RA2_HEADER_THRESH=**	keyword	18	uc	18
	Minimum acceptable percentage of quality checks that must be passed during the SP Headers processing	10-2%	6	As	1
	<10-2%>	units	7	uc	7
	newline character	terminator	1	uc	1
15	**RA2_FLAG_MANOEUVER=**	keyword	19	uc	19
	Not used for FD products (set to +00000)	-	6	As	1
	newline character	terminator	1	uc	1
16	**RA2_MANOEUVER_START_UTC=**	keyword	24	uc	24
	quotation mark (“)	-	1	uc	1

Table 14.4.1.7.1-1 RA-2 Level 1B – SPH

N	Description	Units	Byte Length	Data Type	Dim.
	UTC of start of manoeuver. Not used for FD products (set to all blank space characters)	UTC	27	uc	27
	quotation mark (“)	-	1	uc	1
	newline character	terminator	1	uc	1
17	**RA2_MANOEUVER_STOP_UTC=**	keyword	23	uc	23
	quotation mark (“)	-	1	uc	1
	UTC of end of manoeuver. Not used for FD products (set to all blank space characters)	UTC	27	uc	27
	quotation mark (“)	-	1	uc	1
	newline character	terminator	1	uc	1
18	**Spare (blank space characters)**	ascii	50	uc	50
	newline character	terminator	1	uc	1
	RA-2 Processing Information				
19	**RA2_DGT_BITE_PERCENT=**	keyword	21	uc	21
	Percentage of DGT BITE mode	10-2%	6	As	1
	<10-2%>	units	7	uc	7
	newline character	terminator	1	uc	1
20	**RA2_RF_BITE_PERCENT=**	keyword	20	uc	20
	Percentage of RF BITE mode	10-2%	6	As	1
	<10-2%>	units	7	uc	7
	newline character	terminator	1	uc	1
21	**RA2_IF_CAL_PERCENT=**	keyword	19	uc	19
	Percentage of IF CAL mode	10-2%	6	As	1
	<10-2%>	units	7	uc	7
	newline character	terminator	1	uc	1

Table 14.4.1.7.1-1 RA-2 Level 1B – SPH

N	Description	Units	Byte Length	Data Type	Dim.
22	**RA2_MEASUREMENT_PERCENT=**	keyword	24	uc	24
	Percentage of valid measurements	10-2%	6	As	1
	<10-2%>	units	7	uc	7
	newline character	terminator	1	uc	1
23	**RA2_320_BAND_PERCENT=**	keyword	21	uc	21
	Percentage of the 320 MHz band processed	10-2%	6	As	1
	<10-2%>	units	7	uc	7
	newline character	terminator	1	uc	1
24	**RA2_80_BAND_PERCENT=**	keyword	20	uc	20
	Percentage of the 80 MHz band processed	10-2%	6	As	1
	<10-2%>	units	7	uc	7
	newline character	terminator	1	uc	1
25	**RA2_20_BAND_PERCENT=**	keyword	20	uc	20
	Percentage of the 20 MHz band processed	10-2%	6	As	1
	<10-2%>	units	7	uc	7
	newline character	terminator	1	uc	1
26	**RA2_CW_SPARE_ACQ_PERCENT=**	keyword	25	uc	25
	Percentage of either CW, spare and acquisition	10-2%	6	As	1
	<10-2%>	units	7	uc	7
	newline character	terminator	1	uc	1
27	**Spare**	ascii	50	uc	50

Table 14.4.1.7.1-1 RA-2 Level 1B – SPH

N	Description	Units	Byte Length	Data Type	Dim.
	newline character	terminator	1	uc	1
	MWR Time Information				
28	**MWR_FIRST_RECORD_TIME=**	keyword	22	uc	22
	quotation mark (“)	terminator	1	uc	1
	UTC of the first record in the MWR MDS	UTC	27	uc	27
	quotation mark (“)	terminator	1	uc	1
	newline character	terminator	1	uc	1
29	**MWR_LAST_RECORD_TIME=**	keyword	21	uc	21
	quotation mark (“)	terminator	1	uc	1
	UTC of the last record in the MWR MDS	UTC	27	uc	27
	quotation mark (“)	terminator	1	uc	1
	newline character	terminator	1	uc	1
	MWR Location Information				
30	**MWR_FIRST_LAT=**	keyword	14	uc	14
	Geodetic Latitude of the first record in the MWR MDS A negative value denotes south latitude, a positive value denotes North latitude	10 -6 degrees	11	Al	1
	<10-6degN>	units	10	uc	10
	newline character	terminator	1	uc	1
31	**MWR_FIRST_LONG=**	keyword	15	uc	15
	Geodetic longitude of the first record in the MWR MDS. Positive values East of Greenwich, negative values west of Greenwich	10 -6 degrees	11	Al	1

Table 14.4.1.7.1-1 RA-2 Level 1B – SPH

N	Description	Units	Byte Length	Data Type	Dim.
	<10-6degE>	units	10	uc	10
	newline character	terminator	1	uc	1
32	**MWR_LAST_LAT=**	keyword	13	uc	13
	Geodetic Latitude of the last record in the MWR MDS A negative value denotes south latitude, a positive value denotes North latitude	10^{-6} degrees	11	Al	1
	<10-6degN>	units	10	uc	10
	newline character	terminator	1	uc	1
33	**MWR_LAST_LONG=**	keyword	14	uc	14
	Geodetic longitude of the last record in the MWR MDS Positive values East of Greenwich, negative values west of Greenwich	10^{-6} degrees	11	Al	1
	<10-6degE>	units	10	uc	10
	newline character	terminator	1	uc	1
	MWR Quality Information				
34	**MWR_PROC_FLAG=**	keyword	14	uc	14
	1 or 0 1 if the percentage of error free MWR MDSR is less than the acceptable threshold.	-	1	uc	1
	newline character	terminator	1	uc	1
35	**MWR_HEADER_FLAG=**	keyword	16	uc	16

Table 14.4.1.7.1-1 RA-2 Level 1B – SPH

N	Description	Units	Byte Length	Data Type	Dim.
	1 or 0 1 if the percentage of error free header reading MWR MDSRs is less than the acceptable threshold	-	1	uc	1
	newline character	terminator	1	uc	1
36	**MWR_TELEMETRY_FLAG=**	keyword	19	uc	19
	1 or 0 1 if the percentage of error free telemetry reading MWR MDSRs is less than the acceptable threshold	-	1	uc	1
	newline character	terminator	1	uc	1
37	**MWR_PROC_QUALITY=**	keyword	17	uc	17
	Percentage of processing error free MWR MDSRs	10-2%	6	As	1
	<10-2%>	units	7	uc	7
	newline character	terminator	1	uc	1
38	**MWR_HEAD_QUALITY=**	keyword	17	uc	17
	Percentage of header error free MWR MDSRs.	10-2%	6	As	1
	<10-2%>	units	7	uc	7
	newline character	terminator	1	uc	1
39	**MWR_TELEM_QUALITY=**	keyword	18	uc	18
	Percentage of telemetry error free MWR MDSRs	10-2%	6	As	1
	<10-2%>	units	7	uc	7
	newline character	terminator	1	uc	1
40	**MWR_PROC_THRESH=**	keyword	16	uc	16

Table 14.4.1.7.1-1 RA-2 Level 1B – SPH

N	Description	Units	Byte Length	Data Type	Dim.
	Minimum percentage of MWR MDSRs without processing errors considered acceptable	10-2%	6	As	1
	<10-2%>	units	7	uc	7
	newline character	terminator	1	uc	1
41	**MWR_HEAD_THRESH=**	keyword	16	uc	16
	Minimum percentage of MWR MDSRs without header reading errors considered acceptable	10-2%	6	As	1
	<10-2%>	units	7	uc	7
	newline character	terminator	1	uc	1
42	**MWR_TELEM_THRESH=**	keyword	17	uc	17
	Minimum percentage of MWR MDSRs without telemetry reading is errors considered acceptable	10-2%	6	As	1
	<10-2%>	units	7	uc	7
	newline character	terminator	1	uc	1
43	**MWR_DSR_VALIDITY_THRESH=**	keyword	24	uc	24
	Threshold used to assess validity of DSRs (value: 0 to 7)	-	4	Ac	1
	newline character	terminator	1	uc	1
44	**Spare (ascii blank space characters)**	-	30	uc	30
	newline character	terminator	1	uc	1
45	**Spare (ascii blank space characters)**	-	29	uc	29
	newline character	terminator	1	uc	1

Table 14.4.1.7.1-1 RA-2 Level 1B – SPH

N	Description	Units	Byte Length	Data Type	Dim.
46	**Spare (ascii blank space characters)**	-	50	uc	50
	newline character	terminator	1	uc	1
	DSDs for included Data Sets				
47	**DSD (M) - for the Main MDS**	-	280	dsd	1
48	**DSD (M) - for the burst waveforms MDS (set to NOT USED if not included in product)**	-	280	dsd	1
49	**DSD (M) - for the PTR MDS**	-	280	dsd	1
50	**DSD (M) - for the MWR MDS**	-	280	dsd	1
	DSDs for referenced files				
51	**DSD (R) -RA-2 Level 0 data file from which this product was created**	-	280	dsd	1
52	**DSD (R) -MWR Level 0 data file from which this product was created**	-	280	dsd	1
53	**DSD (R) -RA-2 Proc. configuration data file**	-	280	dsd	1
54	**DSD (R) - Constants File**	-	280	dsd	1
55	**DSD(R) -RA-2 instrument characterization file**	-	280	dsd	1
56	**DSD (R) -Ground characterization mask file for chain A used**	-	280	dsd	1
57	**DSD (R) - Ground characterization mask file for chain B used**	-	280	dsd	1
58	**DSD (R) - RA-2 IF Flight Mask file**		280	dsd	1
59	**DSD (R) - RA-2 USO frequency measurement file**	-	280	dsd	1

Table 14.4.1.7.1-1 RA-2 Level 1B – SPH

N	Description	Units	Byte Length	Data Type	Dim.
60	**DSD (R) - MWR processor configuration file**		280	dsd	1
61	**DSD (R) - MWR Instrument characterization file**		280	dsd	1
62	**DSD (R) - MWR Secondary Lobe file**	-	280	dsd	1
63	**Spare (ascii blank space characters)**	-	279	uc	279
	newline character	terminator	1	uc	1
64	**DSD (R) for Orbit State Vectors Used.**	-	280	dsd	1
65	**DSD - Spare (279 blank space characters followed by 1 newline character)**	-	280	dsd_sp	1
	size (in bytes)		**6975**		

The following key words will be used to fill the fields (field 1 in each DSD, refer to Volume 5) for the DSDs listed in the SPH above.

Table 14.4.1.7.1-2 ASCII Strings for DS_NAME Fields

DSD	DS_NAME (field 1)
DSD (M) - for the Main MDS	RA2_SCIENCE_LEVEL_1B
DSD (M) - for the burst waveforms MDS	RA2_BURST_LEVEL_1B
DSD (M) - for the PTR MDS	RA2_PTR_DATA
DSD (M) - for the MWR MDS	MWR_SCIENCE_LEVEL_1B
DSDs for referenced files	
DSD (R) -RA-2 Level 0 data file from which this product was created	Refer to Volume 6
DSD (R) -MWR Level 0 data file from which this product was created	Refer to Volume 6
DSD (R) -RA-2 Proc. configuration data file	RA2_CONFIGURATION_DATA
DSD (R) - RA-2 Constants file	RA2_CONSTANT_DATA
DSD(R) -RA-2 instrument characterization file	RA2_CHARACTERISATION_DATA
DSD (R) -Ground characterization mask file for chain A used	RA2_IF_MASK_GROUND_DATA_CH_A
DSD (R) - Ground characterization mask file for chain B used	RA2_IF_MASK_GROUND_DATA_CH_B
DSD (R) - RA-2 IF Flight Mask file	RA2_IF_MASK_FLIGHT_DATA
DSD (R) - RA-2 USO frequency measurement file	RA2_USO_DATA
DSD (R) - MWR processor configuration file	MWR_CONFIGURATION_DATA
DSD (R) - MWR Instrument characterization file	MWR_CHARACTERISATION_COEFF
DSD (R) - MWR Secondary Lobe file	MWR_SECONDARY_LOBES_DATA

DSD (R) for Orbit State Vectors Used.	ORBIT_STATE_VECTOR_FILE

14.4.1.7 Data Sets

The contents of the Data Sets are described in the following sections. Data Sets are in mixed binary format. They may contain ASCII strings, but the ASCII strings are not contained within quotation marks as for the MPH/SPH.

14.4.1.7.1 Main MDS

The Main MDS contains the primary measurements from the RA-2 instrument. The MDS contains several time-stamped MDSRs. Each MDSR represents one elementary measurement from the RA-2 source packet. Each elementary measurement corresponds to about 55.7 milliseconds of data take, for an update rate of approximately 18 MDSRs/second. The format of each MDSR is shown below:

Table 14.4.1.7.1-1 RA2 Main MDS MDSR Format

N	Description	Units	Byte Size	Data Type	Dim.
1	**MDSR Time stamp** Time fields based on UTC are computed for each record and referred to the center of the averaged waveform.	-	12	mjd	1
2	**Quality Indicator (-1 for blank MDSR, 0 otherwise)**	-	1	sc	1
3	**Spare (see Note 3)**	-	3	uc	3
4	**OBDH datation word (43 bits)** The datation timing words are transcriptions of the words provided in the source packet, and thus does not change for the 20 records comprising a source packet.	1/524288 s	8	ud	1
5	**USO datation word (40 bits)** Decoded from the secondary packet header of each source packet, and thus does not change for the 20 records comprising a source packet.	10 microsec	8	ud	1
6	**Record Counter**	-	4	ul	1

Table 14.4.1.7.1-1 RA2 Main MDS MDSR Format

N	Description	Units	Byte Size	Data Type	Dim.
7	**Source Sequence Count** Extracted from the header of the source packet, and thus does not change for the 20 records comprising a source packet.	-	2	us	1
8	**Data Block Number**	-	2	us	1
9	**Geodetic Latitude (positive N, negative S)**	10^{-6} deg	4	sl	1
10	**Longitude (positive E, 0=greenwich, negative W)**	10^{-6} deg	4	sl	1
11	**Altitude of CoG above ref. ellipsoid (from best available orbit)**	mm	4	ul	1
12	**Instantaneous height rate derived from orbit**	mm/s	2	ss	1
13	**Instrument operations identification (see Note 1)**	flags	4	ul	1
14	**Level 1B processing Measurement Confidence Data (see Note 2)**	flags	4	ul	1
15	**Spare (see Note 3)**	-	4	uc	4
16	**Average Ku-band waveform corrected for IF transfer function (128 samples)**	1/2048	256	us	128
17	**Central Ku-band filters from DFT corrected for IF transfer function (2 samples)**	1/2048	4	us	2
18	**Average S-band waveforms corrected for IF transfer function (64 samples)**	1/8192	128	us	64
19	**Indexes of the two additional DFT samples**	-	4	ss	2
20	**Ku-band Window Delay**	ps	8	ud	1
21	**S-band Window Delay**	ps	8	ud	1
22	**Ku-band AGC**	10^{-2} dB	2	us	1
23	**S-band AGC**	10^{-2} dB	2	us	1

Table 14.4.1.7.1-1 RA2 Main MDS MDSR Format

N	Description	Units	Byte Size	Data Type	Dim.
24[1]	**Rx_dist_c[2]**	multiple of 12.5 ns	2	us	1
25	**Rx_dist_f[3]**	-	1	uc	1
26	**spare (see Note 3)[4]**	-	1	uc	1
27[5]	**Ku-band scaling factor for sigma zero evaluation**	10^{-2} dB	2	ss	1
28	**S-band scaling factor for sigma zero evaluation**	10^{-2} dB	2	ss	1
29	**Ku time delay flight calibration factor**	ps	4	sl	1
30	**S time delay flight calibration factor**	ps	4	sl	1
31	**Ku sigma zero flight calibration factor**	10^{-2} dB	2	ss	1
32	**S sigma zero flight calibration factor**	10^{-2} dB	2	ss	1
33	**No. of measures for Ku flight calibration factor evaluation**	-	2	us	1
34	**No. of measures for S flight calibration factor evaluation**	-	2	us	1
35	**AGC correction factor for Ku and S bands**	10^{-2} dB	2	ss	1
36	**Spare (see Note 3)**	-	6	uc	6
37	**Ku band Doppler compensation**	ps	4	sl	1

1 Two new fields inserted from here, to include fields as output of the new USO algorithm and other extra parameters;

2 Field #24.1 required by USO DPM;

3 Field #24.2 required by USO DPM;

4 Field #24.3 required by USO DPM;

5 From here the field number has been shifted of three places onward. This field number was 25 in prod spec vol 14 3/O.

Table 14.4.1.7.1-1 RA2 Main MDS MDSR Format

N	Description	Units	Byte Size	Data Type	Dim.
38	**S band Doppler compensation**	ps	4	sl	1
39	**Noise power measurement**	1/2048	2	ss	1
40	**AGC value of noise power measurement**	10^{-2} dB	2	us	1
41	**Spare (see Note 3)**	-	12	uc	12
42	**Width discriminator in FFT filter units**	1/256 FFT filter	2	ss	1
43	**Centre of gravity discriminator in FFT filter units**	1/256 FFT filter	2	ss	1
44	**Leading Edge Position discriminator in FFT filter units**	1/256 FFT filter	2	ss	1
45	**Δoffset in FFT filter units**	1/256 FFT filter	2	ss	1
46	**AGC discriminator**	10^{-2}	2	ss	1
47	**Reference Power value**	10^{-2}	2	ss	1
48	**AGC predicted rate**	10^{-2} dB/s	2	ss	1
49	**AGC corrected value**	10^{-2} dB	2	ss	1
50	**Time delay predicted rate**	ps/s	4	sl	1
51	**Time delay corrected value**	ps	4	sl	1
52	**SNR Loss-of-lock logic**	10^{-2} dB	2	us	1
53	**Tracking filters' interpolator offset Nd_AGC**	1/100	4	sl	1
54	**Tracking filters' interpolator offset Nd_Trk**	1/100	4	sl	1
55	**MFT Threshold**	1/2048	2	us	1
56	**Resolution Selection Logic first counter**	-	2	ss	1
57	**Resolution Selection Logic second counter**	-	2	ss	1
58	**alfa coefficient for on-board distance filter**	10^{-6}	4	ul	1

Table 14.4.1.7.1-1 RA2 Main MDS MDSR Format

N	Description	Units	Byte Size	Data Type	Dim.
59	**beta coefficient for on-board distance filter**	10^{-6}	4	ul	1
60	**alfa coefficient for on-board AGC filter**	10^{-6}	4	ul	1
61	**beta coefficient for on-board AGC filter**	10^{-6}	4	ul	1
62	**delta-alfa 1 on-board scaling factor for S band AGC evaluation**	10^{-2} dB	2	ss	1
63	**delta-alfa 2 on-board scaling factor for S band AGC evaluation**	10^{-2} dB	2	ss	1
64	**delta-alfa 3 on-board scaling factor for S band AGC evaluation**	10^{-2} dB	2	ss	1
65	**Spare (see Note 3)**	-	1	uc	1
66[6]	**USO_clock_smooth[7]**	10^{-6} ps	8	ud	1
67	**USO_correction_quality_flag[8]**	-	1	c	1
TOTAL			**606**		

Note 1: The Instrument Operations flags are defined in the following table. The bit numbering convention is defined in Volume A.

Table 14.4.1.7.1-2 Definition of Instrument Operations Flags

Bit position		Description	Values
ul integer	bits 31-24	Instrument Mode Identifier at Source Packet Level	"IF CAL" 30 Hex "BITE DGT" 43 Hex "BITE RF" 41 Hex

6 Two new fields inserted from here, to include fields as output of the new USO algorithm and other extra parameters;

7 Field #64 required by USO DPM;

8 Field #67 required by USO DPM;

Table 14.4.1.7.1-2 Definition of Instrument Operations Flags

Bit position		Description	Values
			"PSET TRK" 21 Hex "PSET LOOP OUT" 22 Hex "ACQUISITION" 10 Hex "TRACKING" 20 Hex
	bits 23-20	Instrument Mode Identifier at Data Block Level	"SPARE" 0 "ACQUISITION" 1 "TRACKING" 2 "IF CAL" 3 "BITE RF" 4 "BITE DGT" 5 "PSET TRK" 6 "PSET LOOP OUT" 7 "ALIGN FAILED" 8
	bits 19-18	Chirp Band Identifier	0: 320 MHz 1: 80 MHz 2: 20 MHz
	bits 17-13	Unused	set to zero
	bits 12-11	Redundancy Flag of RF subsystem	"chain A" 0 "chain B" 3
	bits 10-9	Redundancy Flag of HPA subsystem	"chain A" 0 "chain B" 3
	bits 8-0	Unused	set to zero

Note 2: The Measurement Confidence flags are defined in the following table. The bit numbering convention is defined in Volume A.

Table 14.4.1.7.1-3 Definition of Level 1B Measurement Confidence Flags

	Bit position	Description	Values
ul integer	bit 31	Error flag for Chirp band identifier	0: no error detected 1: error detected and attempt to recover made
	bit 30	Individual echoes flag	0: no individual echoes in the source packet 1: individual echoes included in the source packet
	bits 29-28	Error flag for decoded Redundancy Flags	0: no mismatch detected 1: mismatch in Red_vec_HPA 2: mismatch in Red_vec_RFSS 3: mismatch in Red_vec_HPA and Red_vec_RFSS
	bit 27	Packet Length Error flag	0: no error detected 1: error detected and attempt to recover made
	bit 26	OBDH validity flag	0: no errors detected 1: anomaly in OBDH value detected
	bit 25	USO validity flag	0: no errors detected 1: anomaly in USO value detected
	bit 24	Fault Identifier	0: no errors detected 1: errors detected by on-board
	bit 23	AGC Fault Identifier	0: no error 1: AGC out of range
	bit 22	Rx delay Fault Identifier	0: no error 1: Rx distance out of range

Table 14.4.1.7.1-3 Definition of Level 1B Measurement Confidence Flags

	Bit position	Description	Values
	bits 21-20	Wave form samples fault identifier	0: no errors 1: Ku waveforms samples equal to zero 2: S waveforms samples equal to zero 3: Ku and S waveform samples equal to zero
	bits 19-18	IF mask selection flag	0: no corrections 1: use always Flight Calib 2: use Flight Calib if valid 3: use always ground Calib
	bits 17-16	IF shape compensation processing mode	0: correction skipped 1: Flight Cal mask used 2: Ground charact Mask used
	bits 15-14	USO Selection flag	1: use always Flight Calib 2: use Flight Calib if valid 3: use always Ground Calib
	bit 13	USO compensation processing mode	0: Flight calibration value used 1: Ground characterization value used
	bit 12-10	PTR Calibration Band Identifier field	0: 320 MHz (Ku) 1: 80 MHz (Ku) 2: 20 MHz (Ku) 4: 160 MHz (S) 7: PTR samples not available
	bit 9	Flag for availability of Ku Flight calibration corrections	0: calibration parameters available 1: Calibration parameters not available -- default values used
	bit 8	Flag for availability of S Flight calibration corrections	0: calibration parameters available 1: Calibration parameters not available -- default values used

Table 14.4.1.7.1-3 Definition of Level 1B Measurement Confidence Flags

Bit position		Description	Values
	bits 7-6	Orbit propagator status flag for initialization mode	0: several errors, no results generated 1: no errors 2: warning errors detected
	bits 5-4	Orbit propagator status flag for propagation mode	0: several errors, no results generated 1: no errors 2: warning errors detected
	bit 3	FEP Error flag	0: no error in FEP annotations 1: error in FEP annotations
	bit 2	PTR Datation Validity flag	0: no error in PTR datation 1: errors in PTR datation
	bit 1	S Band anomaly flag	0: No errors 1: Errors detected
	bit 0	Orbit quality flag	0: Orbit propagator used 1: Orbit Interpolator used

Note 3: The spare fields will always be set to zero, according to Annex A (Paragraph A.2.3) of Products Specifications.

14.4.1.7.2 Burst Waveforms MDS

Upon request, the instrument may downlink raw complex burst waveforms. If such a request has not been made, this MDS will not be included in the product. Each waveform consists of 1600 complex samples. The MDSR contents are shown below.

Table 14.4.1.7.2-1 Level 1B Burst Waveforms MDSR

N	Description	Units	Byte Length	Data Type	Dim.
1	**Data Record Time** Time fields based on UTC are computed for each record and referred to the first data block of the source packet containing the individual echos.	-	12	mjd	1
2	**Quality Indicator (-1 for blank MDSR, 0 otherwise)**	-	1	sc	1
3	**Spare (see Note 1)**	-	3	uc	3
4	**OBDH datation word (43 bits)** The datation timing words are transcriptions of the words provided in the first source packet of the sequence, and does not change over the sequence.	1/524288 s	8	ud	1
5	**Spare (see Note 1)**	-	12	uc	12
6	**Record Counter**	-	4	ul	1
7	**Source Sequence Count** Extracted from the header of the source packet		2	us	1
8	**Ku Individual Echoes (1600 I,Q pairs)**	-	3200	sc	1600*2
	size (in bytes)		**3242**		

Note 1: The spare fields will always be set to zero, according to Annex A (Paragraph A.2.3) of Products Specifications.

14.4.1.7.3 PTR Data MDS

This MDS consists of data output from the PTR processing operations in the Level 1B processing algorithm. There is about one MDSR per second.

Table 14.4.1.7.3-1 Level 1B PTR Data MDSR

N	Description	Units	Byte Length	Data Type	Dim.
1	**Data Record Time**	-	12	mjd	1
2	**Quality Indicator (-1 for blank MDSR, 0 otherwise)**	-	1	sc	1
3	**Spare (see Note 1)**	-	3	uc	3
4	**OBDH datation word (43 bits)** The datation timing words are transcriptions of the words provided in the first source packet of the sequence, and does not change over the sequence.	1/524288 s	8	ud	1
5	**PTR Counter**	-	4	ul	1
6	**128 Normalized PTR Processed Samples**	$2^{-16} - 1$	256	us	128
7	**PTR Calibration Band Identifier** 0: 320 MHz (Ku) 1: 80 MHz (Ku) 2: 20 MHz (Ku) 4: 160 MHz (S) 255: PTR samples not available	-	1	uc	1
8	**Ku Calibration Corrections Identifier** 0: calibration parameters available 1: calibration parameters not available	-	1	uc	1
9	**S Calibration Corrections Identifier** 0: calibration parameters available 1: calibration parameters not available	-	1	uc	1
10	**spare (see Note 1)**	-	1	uc	1
11	**Time delay Calibration Correction (Ku Band)**	[ps]	4	sl	1

Table 14.4.1.7.3-1 Level 1B PTR Data MDSR

N	Description	Units	Byte Length	Data Type	Dim.
12	**Gain Calibration Correction (Ku Band)**	[10-2 dB]	4	sl	1
13	**Time delay Calibration Correction (S Band)**	[ps]	4	sl	1
14	**Gain Calibration Correction (S Band)**	[10-2 dB]	4	sl	1
15	**Number of Measures for Ku Flight calib. Eval.**	-	4	ul	1
16	**Number of Measures for S Flight calib. Eval.**	-	4	ul	1
17	**RFSS Redundancy Flag** 0= chain A 3=chain B	flag	1	uc	1
18	**HPA Redundancy Flag** 0= chain A 3=chain B	flag	1	uc	1
19	**spare (see Note 1)**	-	6	uc	6
	size (in bytes)		**320**		

Note 1: The spare fields will always be set to zero, according to Annex A (Paragraph A.2.3) of Products Specifications.

14.4.1.7.4 MWR MDS

The MWR MDS contains data from the MWR sensor. The MDS is composed of several MDSRs. The fields that cannot be filled at Level 1B processing are set to zero. They are updated by level 2 processing. There is one record every 1.2 seconds. The format of each MDSR is described below.

Table 14.4.1.7.4-1 Level 1B/2 MWR MDSR

N	Description	Units	Byte Length	Data Type	Dim.

Table 14.4.1.7.4-1 Level 1B/2 MWR MDSR

N	Description	Units	Byte Length	Data Type	Dim.
1	**UTC Time stamp of MDSR**	-	12	mjd	1
2	**Quality Indicator (-1 for blank MDSR, 0 otherwise)**	-	1	sc	1
3	**Spare (See Note 3, for differences in OFL Level2 products)**	-	3	uc	3
4	**Geodetic Latitude (positive N, negative S)**	10^{-6} deg	4	sl	1
5	**Longitude (positive E, 0 at Greenwich, negative W)**	10^{-6} deg	4	sl	1
6	**Record Counter**	-	2	us	1
7	**Spare (see Note 3)**	-	2	uc	2
8	**Measurement Confidence Data Level 1B/2 (see Note 1)**	flags	4	ul	1
9	**Spare (seeNote 3)**	-	4	uc	4
10	**Spare (see Note 3)**	-	4	uc	4
11	**23.8 GHz brightness temperature**	10^{-2} K	2	us	1
12	**23.8 GHz brightness temperature standard deviation**	10^{-2} K	2	us	1
13	**36.5 GHz brightness temperature**	10^{-2} K	2	us	1
14	**36.5 GHz brightness temperature standard deviation**	10^{-2} K	2	us	1
15	**Spare (Note3)**	-	2	uc	2
16	**MWR instrument flags (see Note 2)**	flags	2	us	1
17	**MWR Processing Information, Number of averaged samples (23.8 GHz channel)**	-	2	us	1
18	**MWR Processing Information, Number of averaged samples (36.5 GHz channel)**	-	2	us	1

Table 14.4.1.7.4-1 Level 1B/2 MWR MDSR

N	Description	Units	Byte Length	Data Type	Dim.
19	**MWR Processing Information, Number of outputs since last calibration period**	-	2	us	1
20	**MWR Processing Information, Packet Telemetry counter for 23.8 GHz channel**	-	2	us	1
21	**MWR Processing Information, Packet telemetry counter for 36.5 GHz channel**	-	2	us	1
22	**MWR Processing Information, 23.8 GHz channel source packet ID**	-	2	us	1
23	**MWR Processing Information, 36.5 GHz channel source packet ID**	-	2	us	1
24	**MWR Processing Information, Moving window size**	-	2	us	1
25	**RA-2 quality interpolation flag**	flag	2	us	1
26	**Spare (see Note 3)**	-	2	uc	2
27	**Water vapour content** (filled in Level 2 processing, set to zero for Level 1B)	10^{-2} g/cm2	2	ss	1
28	**Liquid water content** (filled in Level 2 processing, set to zero for Level 1B)	10^{-2} Kg/ m2	2	ss	1
29	**MWR derived wet tropospheric correction** (filled in Level 2 processing, set to zero for Level 1B)	mm	2	ss	1
30	**Interpolated RA2 wind speed** (filled in Level 2 processing, set to zero for Level 1B)	mm/s	2	ss	1
31	**Interpolated RA2 Ku-band corrected ocean backscatter coefficient** (filled in Level 2 processing, set to zero for Level 1B)	dB/100	2	ss	1

Table 14.4.1.7.4-1 Level 1B/2 MWR MDSR

N	Description	Units	Byte Length	Data Type	Dim.
32	**Interpolated RA2 S-band corrected ocean backscatter coefficient** (filled in Level 2 processing, set to zero for Level 1B)	dB/100	2	ss	1
33	**Interpolated RA2 Ku-band significant wave height** (filled in Level 2 processing, set to zero for Level 1B)	mm	2	ss	1
34	**Spare (see Note 3)**	-	2	uc	2
	size (in bytes)		**88**		

Note 1: The content of the MWR Measurement Confidence Data is defined in the table below. The bit numbering convention is defined in Volume A.

Table 14.4.1.7.4-2 Definition of MWR Measurement Confidence Data Field

Bit position		Description	Values
ul integer	bit 31	Brightness Temperature Range check (channel 1)	0: in range 1: out of range
	bit 30	Brightness Temperature Range check (channel 2)	0: in range 1: out of range
	bit 29	at L2: Land/Ocean flag at L1b: Unused, set to zero	0: ocean 1: land
	bit 28	CRC check flag	0: no error 1: error
	bit 27	Processing Flag	0: no error 1: error
	bit 26	Telemetry Flag	0: no error 1: error
	bit 25	Header Flag	0: no error 1: error

Table 14.4.1.7.4-2 Definition of MWR Measurement Confidence Data Field

Bit position		Description	Values
	bits 24-22	Validity: Indicates data set record validity (result of the weighted sequence of Temp_flg, OBDH_flg, and BP_flg)	min: 0 max: 7
	bit 21	Spare	set to zero
	bit 20-19	Orbit propagator status flag for *initialisation* mode at L1b/L2	0: several errors, no result 1: no error 2: warning detected
	bit 18-17	Orbit propagator status flag for *propagation* mode at L1b/L2	0: several errors, no result 1: no error 2: warning detected
	bit 16-2	Spare	set to zero
	bit 1	Orbit Accuracy Flag	0: Orbit Propagator used 1: Orbit Interpolator used
	bit 0	Level 2 processing error flag	0: no error 1: error

Note 2: The content of the MWR Instrument Flags field is defined in the table below. The bit numbering convention is defined in Volume A.

Table 14.4.1.7.4-3 Definition of MWR Instrument Flags Field

Bit position		Description	Values
us integer	bit 15	Temp Flag (Tmp_flg) Indicates uniformity of CEU temperature	0: temperature consistency 1: temperature inconsistency
	bit 14	OBDH Flag (OBDH_flg) flag to indicate data is missing	0: no error 1: error
	bit 13	Red Flag: ICU channel	0: normal channel

Table 14.4.1.7.4-3 Definition of MWR Instrument Flags Field

Bit position		Description	Values
		redundancy indicator	1: redundant channel
	bit 12	Power Bus Protection Flag (PBP_flg) Power Bus protection indicator	0: no protection 1: protection
	bit 11	Over Prot. flag Overvoltage/Overload protection indicator	0: no protection 1: protection
	bit 10	Spare	set to zero
	bits 9-0	Spare	set to zeros

Note 3: The spare fields will always be set to zero, according to Annex A (Paragraph A.2.3) of Products Specifications.

FIELD 3: On level2 products produced with the OFL CMA processor this field will contain the software version of the RA2 IPF used to process the input level1 and is defined as “Level 1B software number” of three bytes. As an example, if the IPF version used is 4.58, the "Level 1B software number" value will be set to 458.

14.4.1.8 Estimated Size

The estimated size of the Level 1B product for one half orbit is calculated as follows:

MPH: 1247 bytes

SPH: 6975 bytes

Main MDS: 606 bytes/MDSR * 54219 per product = 32.857 MB

Burst Waveforms MDS: 3242 bytes/MDSR * 2711 = 8.789 MB

PTR Data MDS: 320 bytes/MDSR * 2711 per product = 868 kBytes

MWR MDS: 88 bytes/MDSR * 2516 per product = 222 kBytes

TOTAL: 42 MB (max.) or 34 MB if burst waveforms are not included

The estimated values are based on the following assumptions:

- 3020 seconds per half orbit
- one Main MDSR per 55.7 ms
- one burst waveforms MDSR and one PTR data MDSR

  per 55.7ms * 20 = 1.114 seconds
- one MWR MDSR per 1.2 seconds

14.5 LEVEL 2 PRODUCTS

There are 5 RA-2 Level 2 products: the Fast delivery Geophysical Data record, the Intermediate Geophysical Data record, the Geophysical Data Record, the Sensor Geophysical Data Record, and the Wind/Wave product (with 2 levels of consolidation: FDMAR and IMAR) for Meteo and Near Real Time oceanography users.

14.5.1 RA-2 Geophysical Data Record

This product will consist of a series of records, each representing approximately 1 second of data. There shall be sufficient records to cover a pass (i.e., approximately 3000) formatted from pole to pole when fully consolidated. Records are provided independently of the surface type at the sub-satellite point.

Three different products can be generated:

- the **FGDR** is processed systematically using DORIS Navigator orbit estimation and is available from the PDHS, 3 hours after data acquisition;

- the **IGDR** is processed systematically off-line using DORIS preliminary orbit

estimation and is available 3 to 5 days after data acquisition;

- the **GDR** (fully consolidated) version is processed systematically using the DORIS Precise orbit estimation and is available 50 days after data acquisition.

Parameters in the product include estimated range, wave height, and windspeed.

14.5.1.1 Input Data

Level 1B product plus auxiliary data.

14.5.1.2 Auxiliary Data Used

Auxiliary data required for Level 2 processing may include files used in Level 1B processing, plus the following auxiliary data files:

Table 14.4.1.7.4-1 Auxiliary Data Files for RA-2 Level 2 Processing

Description	Auxiliary File ID
Solar activity data file	RA2_SOL_AX
Pole location data file	RA2_POL_AX
Platform data file	RA2_PLA_AX
Ionospheric coefficients file	RA2_IOC_AX
Mean sea surface height map file	RA2_MSS_AX
Altitude of Meteo grid points file	RA2_MET_AX
Ocean/Ice2 configuration (system) file	RA2_SOI_AX
Ice1 / Sea Ice configuration (system) file	RA2_ICT_AX
Modified dip map file	RA2_DIP_AX

Table 14.4.1.7.4-1 Auxiliary Data Files for RA-2 Level 2 Processing

Description	Auxiliary File ID
Cartwright amplitudes file	RA2_SET_AX
Ocean tide solution 1 map file	RA2_OT1_AX
Ocean tide solution 2 map file	RA2_OT2_AX
Tidal loading coefficients map file (Solution 1)	RA2_TLG_AX
Tidal loading coefficients map file (Solution 2)	RA2_TLD_AX
Geoid height map file	RA2_GEO_AX
Ocean depth / land elevation map file	AUX_DEM_AX
Slope model for Greenland map file	RA2_SL1_AX
Slope model for Antarctica map file	RA2_SL2_AX
RA2 characterisation data file	RA2_CHD_AX
RA2 constants file	RA2_CST_AX
Sea state bias table file	RA2_SSB_AX
ENVISAT-1 Attitude data file	AUX_ATT_AX
ECMWF Forecast data file or ECMWF Analysis data file (3 ECMWF files may be used)	AUX_ECF_AX AUX_ECA_AX
Orbit state vectors file (one of the following) : The OSV file is only used for RA2 level-2 processing in OFL, not in NRT.	DOR_NAV_0P AUX_FPO_AX AUX_FRO_AX DOR_POR_AX DOR_VOR_AX
MWR land sea flag data	MWR_LSF_AX

14.5.1.3 Processing Performed

This document is not the applicable document regarding RA-2 and MWR processing. The information included here is intended only as a high-level overview. The Level 2 processing for RA-2 consists of:

- the calibrated Level 1B waveforms are processed by 4 different retrackers in parallel;
- the 4 range estimates are placed in the product;
- the estimated range measurements are not corrected for the various geophysical effects, but the corrections are calculated and supplied in the product;
- estimates of significant wave height, backscatter coefficient and other parameters are performed.

14.5.1.4 Product Structure

The high-level product structure is shown below.

Table 14.4.1.7.4-1 Level 2 FGDR/IGDR/GDR Product Structure

MPH
Level 2 - SPH
RA-2 MDS
MWR MDS

14.5.1.5 Main Product Header

The MPH is described in Volume 5.

14.5.1.6 Specific Product Header

The SPH is an ASCII header and as such follows the ASCII conventions described in Volume 5. The content of the RA-2 Level 2 Specific Product Header shall be as follows.

Table 14.4.1.7.4-1 RA-2 Level 2-SPH

N	Description	Units	Byte Length	Data Type	Dim.
1	**SPH_DESCRIPTOR=**	keyword	15	uc	15
	quotation mark (“)	-	1	uc	1
	SPH Descriptor, set to RA2_MWR_FDGDR or RA2_MWR_IGDR or RA2_MWR_GDR. (see Note 1) ASCII string describing the product. Unused characters set to the ascii blank space character.	-	28	uc	28
	quotation mark (“)	-	1	uc	1
	newline character	terminator	1	uc	1
	RA-2 Time Information				
2	**RA2_FIRST_RECORD_TIME=**	keyword	22	uc	22
	quotation mark (“)	-	1	uc	1
	UTC Time of first record in the RA2 MDS of this product.	UTC	27	uc	27
	quotation mark (“)	-	1	uc	1
	newline character	terminator	1	uc	1
3	**RA2_LAST_RECORD_TIME=**	keyword	21	uc	21
	quotation mark (“)	-	1	uc	1

Table 14.4.1.7.4-1 RA-2 Level 2-SPH

N	Description	Units	Byte Length	Data Type	Dim.
	UTC Time of last record in the RA2 MDS of this product.	UTC	27	uc	27
	quotation mark (“)	-	1	uc	1
	newline character	terminator	1	uc	1
	RA-2 Positioning Information				
4	**RA2_FIRST_LAT=**	keyword	14	uc	14
	Geodetic Latitude of the first record in the RA2 MDS A negative value denotes south latitude, a positive value denotes North latitude	10^{-6} degrees	11	Al	1
	<10-6degN>	units	10	uc	10
	newline character	terminator	1	uc	1
5	**RA2_FIRST_LONG=**	keyword	15	uc	15
	Geodetic longitude of the first record in the RA2 MDS. Positive values East of Greenwich, negative values west of Greenwich	10^{-6} degrees	11	Al	1
	<10-6degE>	units	10	uc	10
	newline character	terminator	1	uc	1
6	**RA2_LAST_LAT=**	keyword	13	uc	13
	Geodetic Latitude of the last record in the RA2 MDS A negative value denotes south latitude, a positive value denotes North latitude	10^{-6} degrees	11	Al	1
	<10-6degN>	units	10	uc	10
	newline character	terminator	1	uc	1
7	**RA2_LAST_LONG=**	keyword	14	uc	14

Table 14.4.1.7.4-1 RA-2 Level 2-SPH

N	Description	Units	Byte Length	Data Type	Dim.
	Geodetic longitude of the last record in the RA2 MDS Positive values East of Greenwich, negative values west of Greenwich	10 -6 degrees	11	Al	1
	<10-6degE>	units	10	uc	10
	newline character	terminator	1	uc	1
7b	**PASS_NUMBER=**	keyword	12	uc	12
	Pass number from pole to pole (set to +00000 for NRT products)	-	6	As	1
	newline character	terminator	1	uc	1
8	**Spare (blank characters)**	-	31	uc	31
	newline character	terminator	1	uc	1
	RA-2 Quality Information				
9	**RA2_L2_PROC_FLAG=**	keyword	17	uc	17
	Processing errors significance flag 1 or 0 1 if the percentage of DSRs free of processing errors during Level 2 processing is less than the acceptable threshold.	-	1	uc	1
	newline character	terminator	1	uc	1
10	**RA2_L1B_PROC_FLAG=**	keyword	18	uc	18
	Processing errors significance flag 1 or 0 1 if the percentage of DSRs free of processing errors during Level 1B SP data block processing is less than the acceptable threshold.	-	1	uc	1
	newline character	terminator	1	uc	1
11	**RA2_L1B_HEADER_FLAG=**	keyword	20	uc	20

Table 14.4.1.7.4-1 RA-2 Level 2-SPH

N	Description	Units	Byte Length	Data Type	Dim.
	Header errors significance flag 1 or 0 1 if the percentage of DSRs free of processing errors during Level 1B SP Headers processing is less than the acceptable threshold.	-	1	uc	1
	newline character	terminator	1	uc	1
12	**RA2_L2_PROCESSING_QUALITY=**	keyword	26	uc	26
	Percentage of DSRs free of processing errors during the Level 2 processing	10-2%	6	As	1
	<10-2%>	units	7	uc	7
	newline character	terminator	1	uc	1
13	**RA2_L1B_PROCESSING_QUALITY=**	keyword	27	uc	27
	Percentage of DSRs free of processing errors during the Level IB SP data block processing	10-2%	6	As	1
	<10-2%>	units	7	uc	7
	newline character	terminator	1	uc	1
14	**RA2_L1B_HEADER_QUALITY=**	keyword	23	uc	23
	Percentage of DSRs free of processing errors during the Level 1B SP Headers processing	10-2%	6	As	1
	<10-2%>	units	7	uc	7
	newline character	terminator	1	uc	1
15	**RA2_L2_PROC_THRESH=**	keyword	19	uc	19
	Minimum acceptable percentage of processing error free DSR during Level 2 processing	10-2%	6	As	1
	<10-2%>	units	7	uc	7

Table 14.4.1.7.4-1 RA-2 Level 2-SPH

N	Description	Units	Byte Length	Data Type	Dim.
	newline character	terminator	1	uc	1
16	**RA2_L1B_PROC_THRESH=**	keyword	20	uc	20
	Minimum acceptable percentage of processing error free DSR during Level 1B SP datablocks processing	10-2%	6	As	1
	<10-2%>	units	7	uc	7
	newline character	terminator	1	uc	1
17	**RA2_L1B_HEADER_THRESH=**	keyword	22	uc	22
	Minimum acceptable percentage of processing error free DSR during the Level 1B SP Headers processing	10-2%	6	As	1
	<10-2%>	units	7	uc	7
	newline character	terminator	1	uc	1
18	**RA2_FLAG_MANOEUVER=**	keyword	19	uc	19
	Orbit manoeuver indicator Not used for FD products (set to +00000 if not used)	-	6	As	1
	newline character	terminator	1	uc	1
19	**RA2_MANOEUVER_START_UTC=**	keyword	24	uc	24
	quotation mark (“)	-	1	uc	1
	UTC of start of manoeuver. Not used for FD products (set to all blank space characters)	UTC	27	uc	27
	quotation mark (“)	-	1	uc	1
	newline character	terminator	1	uc	1
20	**RA2_MANOEUVER_STOP_UTC=**	keyword	23	uc	23
	quotation mark (“)	-	1	uc	1

Table 14.4.1.7.4-1 RA-2 Level 2-SPH

N	Description	Units	Byte Length	Data Type	Dim.
	UTC of end of manoeuver. Not used for FD products (set to all blank space characters)	UTC	27	uc	27
	quotation mark (“)	-	1	uc	1
	newline character	terminator	1	uc	1
21	**Spare (blank space characters)**	ascii	50	uc	50
	newline character	terminator	1	uc	1
	RA2 Subsystem Identification				
22	**RA2_RV_RFSS_DEF=**	keyword	16	uc	16
	Hardware configuration for RF subsystem (A or B)	-	1	uc	1
	newline character	terminator	1	uc	1
23	**RA2_RV_HPA_DEF=**	keyword	15	uc	15
	Hardware configuration for HPA subsystem (A or B)	-	1	uc	1
	newline character	terminator	1	uc	1
	RA-2 Processing Information				
24	**RA2_MEASUREMENT_PERCENT=**	keyword	24	uc	24
	Percentage of valid measurements	10-2%	6	As	1
	<10-2%>	units	7	uc	7
	newline character	terminator	1	uc	1
25	**RA2_320_BAND_PERCENT=**	keyword	21	uc	21
	Percentage of the 320 MHz band processed	10-2%	6	As	1
	<10-2%>	units	7	uc	7

Table 14.4.1.7.4-1 RA-2 Level 2-SPH

N	Description	Units	Byte Length	Data Type	Dim.
	newline character	terminator	1	uc	1
26	**RA2_80_BAND_PERCENT=**	keyword	20	uc	20
	Percentage of the 80 MHz band processed	10-2%	6	As	1
	<10-2%>	units	7	uc	7
	newline character	terminator	1	uc	1
27	**RA2_20_BAND_PERCENT=**	keyword	20	uc	20
	Percentage of the 20 MHz band processed	10-2%	6	As	1
	<10-2%>	units	7	uc	7
	newline character	terminator	1	uc	1
28	**RA2_OCEAN_KU_RETRACK_PERCENT=**	keyword	29	uc	29
	Percentage of valid Ku ocean retracker measurements	10-2%	6	As	1
	<10-2%>	units	7	uc	7
	newline character	terminator	1	uc	1
29	**RA2_OCEAN_S_RETRACK_PERCENT=**	keyword	28	uc	28
	Percentage of valid S ocean retracker measurements	10-2%	6	As	1
	<10-2%>	units	7	uc	7
	newline character	terminator	1	uc	1
30	**RA2_ICE1_KU_RETRACK_PERCENT=**	keyword	28	uc	28
	Percentage of valid Ku ice1 retracker measurements	10-2%	6	As	1
	<10-2%>	units	7	uc	7
	newline character	terminator	1	uc	1

Table 14.4.1.7.4-1 RA-2 Level 2-SPH

N	Description	Units	Byte Length	Data Type	Dim.
31	**RA2_ICE1_S_RETRACK_PERCENT=**	keyword	27	uc	27
	Percentage of valid S ice1 retracker measurements	10^{-2}%	6	As	1
	<10-2%>	units	7	uc	7
	newline character	terminator	1	uc	1
32	**RA2_ICE2_KU_RETRACK_PERCENT=**	keyword	28	uc	28
	Percentage of valid Ku ice2 retracker measurements	10^{-2}%	6	As	1
	<10-2%>	units	7	uc	7
	newline character	terminator	1	uc	1
33	**RA2_ICE2_S_RETRACK_PERCENT=**	keyword	27	uc	27
	Percentage of valid S ice2 retracker measurements	10^{-2}%	6	As	1
	<10-2%>	units	7	uc	7
	newline character	terminator	1	uc	1
34	**RA2_SEAICE_KU_RETRACK_PERCENT=**	keyword	30	uc	30
	Percentage of valid Ku sea/ice retracker measurements	10^{-2}%	6	As	1
	<10-2%>	units	7	uc	7
	newline character	terminator	1	uc	1
35	**RA2_PEAKINESS_LOW_PERCENT=**	keyword	26	uc	26
	Percentage of peakiness low measurements	10^{-2}%	6	As	1
	<10-2%>	units	7	uc	7
	newline character	terminator	1	uc	1
36	**RA2_PEAKINESS_HIGH_PERCENT=**	keyword	27	uc	27

Table 14.4.1.7.4-1 RA-2 Level 2-SPH

N	Description	Units	Byte Length	Data Type	Dim.
	Percentage of peakiness high measurements	10-2%	6	As	1
	<10-2%>	units	7	uc	7
	newline character	terminator	1	uc	1
37	**MWR_BT_OPTIMAL_INTERPOLATION_PERCENT=**	keyword	37	uc	37
	Percentage of optimal interpolation of the MWR brightness temperatures	10-2%	6	As	1
	<10-2%>	units	7	uc	7
	newline character	terminator	1	uc	1
38	**RA2_TIME_SHIFT_MIDFRAME=**	keyword	24	uc	24
	Offset to apply to time tag to derive the datation of the first waveform in a source packet	10-6s	11	Al	1
	<10-6s>	units	7	uc	7
	newline character	terminator	1	uc	1
39	**RA2_TIME_INTERVAL=**	keyword	18	uc	18
	Time interval between two waveforms	10-6s	11	Al	1
	<10-6s>	units	7	uc	7
	newline character	terminator	1	uc	1
40	**RA2_IF_MASK_SEL=**	keyword	16	uc	16
	IF Mask selection flag	-	1	uc	1
	newline character	terminator	1	uc	1
41	**RA2_IF_MASK_PROC=**	keyword	17	uc	17
	IF shape compensation processing mode	-	1	uc	1

Table 14.4.1.7.4-1 RA-2 Level 2-SPH

N	Description	Units	Byte Length	Data Type	Dim.
	newline character	terminator	1	uc	1
42	**RA2_USO_SEL=**	keyword	12	uc	12
	USO selection flag	-	1	uc	1
	newline character	terminator	1	uc	1
43	**RA2_USO_PROC=**	keyword	13	uc	13
	USO compensation processing mode	-	1	uc	1
	newline character	terminator	1	uc	1
44	**AVERAGE_GLOBAL_PRESSURE=**	keyword	24	uc	24
	Average of the global pressure over ocean computed from meteo field the closest time from the first measurement. This field must be set to all zeroes.	10Pa	11	Al	1
	<10Pa>	units	6	uc	6
	newline character	terminator	1	uc	1
45	**SOLAR_ACTIVITY_INDEX=**	keyword	21	uc	21
	Interpolated value for the solar activity index used for the first measurement	-	6	As	1
	newline character	terminator	1	uc	1
46	**METEO_MODEL_VERSION=**	keyword	20	uc	20
	quotation mark (“)	terminator	1	uc	1
	Version of the meteorological model	-	50	uc	50
	quotation mark (“)	terminator	1	uc	1
	newline character	terminator	1	uc	1
47	**DORIS_IONOSPHERIC_MODEL_VERSION=**	keyword	32	uc	32

Table 14.4.1.7.4-1 RA-2 Level 2-SPH

N	Description	Units	Byte Length	Data Type	Dim.
	quotation mark (“)	terminator	1	uc	1
	Version of the ionospheric model	-	50	uc	50
	quotation mark (“)	terminator	1	uc	1
	newline character	terminator	1	uc	1
48	**Spare**	ascii	50	uc	50
	newline character	terminator	1	uc	1
	MWR Time Information				
49	**MWR_FIRST_RECORD_TIME=**	keyword	22	uc	22
	quotation mark (“)	terminator	1	uc	1
	UTC of the first record in the MWR MDS	UTC	27	uc	27
	quotation mark (“)	terminator	1	uc	1
	newline character	terminator	1	uc	1
50	**MWR_LAST_RECORD_TIME=**	keyword	21	uc	21
	quotation mark (“)	terminator	1	uc	1
	UTC of the last record in the MWR MDS	UTC	27	uc	27
	quotation mark (“)	terminator	1	uc	1
	newline character	terminator	1	uc	1
	MWR Location Information				
51	**MWR_FIRST_LAT=**	keyword	14	uc	14
	Geodetic Latitude of the first record in the MWR MDS A negative value denotes south latitude, a positive value denotes North latitude	10^{-6} degrees	11	Al	1

Table 14.4.1.7.4-1 RA-2 Level 2-SPH

N	Description	Units	Byte Length	Data Type	Dim.
	<10-6degN>	units	10	uc	10
	newline character	terminator	1	uc	1
52	**MWR_FIRST_LONG=**	keyword	15	uc	15
	Geodetic longitude of the first record in the MWR MDS. Positive values East of Greenwich, negative values west of Greenwich	10^{-6} degrees	11	Al	1
	<10-6degE>	units	10	uc	10
	newline character	terminator	1	uc	1
53	**MWR_LAST_LAT=**	keyword	13	uc	13
	Geodetic Latitude of the last record in the MWR MDS A negative value denotes south latitude, a positive value denotes North latitude	10^{-6} degrees	11	Al	1
	<10-6degN>	units	10	uc	10
	newline character	terminator	1	uc	1
54	**MWR_LAST_LONG=**	keyword	14	uc	14
	Geodetic longitude of the last record in the MWR MDS Positive values East of Greenwich, negative values west of Greenwich	10^{-6} degrees	11	Al	1
	<10-6degE>	units	10	uc	10
	newline character	terminator	1	uc	1
	MWR Quality Information				
55	**MWR_L2_PROC_FLAG=**	keyword	17	uc	17
	1 or 0 1 if the percentage of DSRs free of processing errors during Level 2 processing is less than the acceptable threshold.	-	1	uc	1

Table 14.4.1.7.4-1 RA-2 Level 2-SPH

N	Description	Units	Byte Length	Data Type	Dim.
	newline character	terminator	1	uc	1
56	**MWR_L1B_PROC_FLAG=**	keyword	18	uc	18
	1 or 0 1 if the percentage of MWR MDSR without errors is less than the acceptable threshold.	-	1	uc	1
	newline character	terminator	1	uc	1
57	**MWR_L1B_HEADER_FLAG=**	keyword	20	uc	20
	1 or 0 1 if the number of MWR MDSRs without header reading errors is less than the acceptable threshold	-	1	uc	1
	newline character	terminator	1	uc	1
58	**MWR_L1B_TELEMETRY_FLAG=**	keyword	23	uc	23
	1 or 0 1 if the number of MWR MDSRs without telemetry reading errors is less than the acceptable threshold	-	1	uc	1
	newline character	terminator	1	uc	1
59	**MWR_L2_PROC_QUALITY=**	keyword	20	uc	20
	Percentage of DSR free of processing errors during MWR Level 2 processing	10-2%	6	As	1
	<10-2%>	units	7	uc	7
	newline character	terminator	1	uc	1
60	**MWR_L1B_PROC_QUALITY=**	keyword	21	uc	21
	Percentage of processing error free MWR MDSRs during Level 1B processing	10-2%	6	As	1
	<10-2%>	units	7	uc	7

Table 14.4.1.7.4-1 RA-2 Level 2-SPH

N	Description	Units	Byte Length	Data Type	Dim.
	newline character	terminator	1	uc	1
61	**MWR_L1B_HEAD_QUALITY=**	keyword	21	uc	21
	Percentage of header error free MWR MDSRs.	10-2%	6	As	1
	<10-2%>	units	7	uc	7
	newline character	terminator	1	uc	1
62	**MWR_L1B_TELEM_QUALITY=**	keyword	22	uc	22
	Percentage of telemetry error free MWR MDSRs	10-2%	6	As	1
	<10-2%>	units	7	uc	7
	newline character	terminator	1	uc	1
63	**MWR_L2_PROC_THRESH=**	keyword	19	uc	19
	Minimum percentage of DSRs free of processing errors during MWR Level 2 processing considered acceptable	10-2%	6	As	1
	<10-2%>	units	7	uc	7
	newline character	terminator	1	uc	1
64	**MWR_L1B_PROC_THRESH=**	keyword	20	uc	20
	Minimum percentage of MWR MDSRs without processing errors considered acceptable	10-2%	6	As	1
	<10-2%>	units	7	uc	7
	newline character	terminator	1	uc	1
65	**MWR_L1B_HEAD_THRESH=**	keyword	20	uc	20
	Minimum percentage of MWR MDSRs without header reading errors considered acceptable	10-2%	6	As	1
	<10-2%>	units	7	uc	7

Table 14.4.1.7.4-1 RA-2 Level 2-SPH

N	Description	Units	Byte Length	Data Type	Dim.
	newline character	terminator	1	uc	1
66	**MWR_L1B_TELEM_THRESH=**	keyword	21	uc	21
	Minimum percentage of MWR MDSRs without telemetry reading is errors considered acceptable	10-2%	6	As	1
	<10-2%>	units	7	uc	7
	newline character	terminator	1	uc	1
67	**RA2_WS_OPTIMAL_INTERPOLATION_PERCENT=**	keyword	37	uc	37
	Percentage of optimal interpolation of the RA2 altimeter wind speed at the MWR DSR time stamps	10-2%	6	As	1
	<10-2%>	units	7	uc	7
	newline character	terminator	1	uc	1
68	**MWR_LANDFLAG_PERCENT=**	keyword	21	uc	21
	land coverage percentage	10-2%	6	As	1
	<10-2%>	units	7	uc	7
	newline character	terminator	1	uc	1
69	**MWR_SEAFLAG_PERCENT=**	keyword	20	uc	20
	sea coverage percentage	10-2%	6	As	1
	<10-2%>	units	7	uc	7
	newline character	terminator	1	uc	1
70	**Spare (ascii blank space characters)**	-	50	uc	50
	newline character	terminator	1	uc	1
	DSDs for included Data Sets				
71	**DSD (M) - for the RA2 MDS**	-	280	dsd	1

Table 14.4.1.7.4-1 RA-2 Level 2-SPH

N	Description	Units	Byte Length	Data Type	Dim.
72	**DSD (M) - for the MWR MDS**	-	280	dsd	1
73	**DSD (M) - for the 18 Hz Average Waveforms MDS (see Note 2)**	-	280	dsd	1
74	**DSD (M) - for the Burst Waveforms MDS (see Note 2)**	-	280	dsd	1
75	**DSD- Spare Reserved (each DSD-Spare is 279 blank space characters followed by one newline character)**	-	280	dsd_sp	1
76	**DSD- Spare Reserved (each DSD-Spare is 279 blank space characters followed by one newline character)**	-	280	dsd_sp	1
77	**DSD- Spare (each DSD-Spare is 279 blank space characters followed by one newline character)**	-	280	dsd_sp	1
	DSDs for referenced files				
78	**DSD (R) -Level 1B product from which this product was created**	-	280	dsd	1
79	**DSD (R) -for Level-2 parent product (see Note 2)**	-	280	dsd	1
80	**DSD (R) for Orbit Data File Used**	-	280	dsd	1
81	**DSD (R) - For DORIS Ionospheric correction file (see Note 3)**	-	280	dsd	1
82	**DSD (R) - RA2 Level 1B IF data file**	-	280	dsd	1
83	**DSD (R) - RA2 Level 1B USO data file**	-	280	dsd	1
84	**DSD (R) - MWR Level 1B side lobe data file**	-	280	dsd	1
85	**DSD - spare (279 blanks followed by a newline)**	-	280	dsd_sp	1
86	**DSD (R) - referencing the ENVISAT-1 Attitude data file**	-	280	dsd	1
87	**DSD - spare (279 blanks followed by a newline)**	-	280	dsd_sp	1
88	**DSD (R) - Platform data file**	-	280	dsd	1

Table 14.4.1.7.4-1 RA-2 Level 2-SPH

N	Description	Units	Byte Length	Data Type	Dim.
89	**DSD (R) - for first ECMWF file used**	-	280	dsd	1
90	**DSD (R) - for second ECMWF file used**	-	280	dsd	1
91	**DSD (R) - for third ECMWF file used**	-	280	dsd	1
92	**DSD (R) - Solar Activity Data File**	-	280	dsd	1
93	**DSD (R) - Pole Location Data File**	-	280	dsd	1
94	**DSD - spare (279 blanks followed by a newline)**	-	280	dsd_sp	1
95	**DSD - spare (279 blanks followed by a newline)**	-	280	dsd_sp	1
96	**DSD - spare (279 blanks followed by a newline)**	-	280	dsd_sp	1
97	**DSD (R) - RA2 Level 1B Configuration File**	-	280	dsd	1
98	**DSD (R) - RA2 Level 1B Characterization Data File**	-	280	dsd	1
99	**DSD (R) - MWR Level 1B Configuration File**	-	280	dsd	1
100	**DSD (R) - MWR Level 1B Characterization Data File**	-	280	dsd	1
101	**DSD (R) - MWR Land/Sea Flags Data File**	-	280	dsd	1
102	**DSD - spare (279 blanks followed by a newline)**	-	280	dsd_sp	1
103	**DSD - spare (279 blanks followed by a newline)**	-	280	dsd_sp	1
104	**DSD (R) - Altitude of Meteo Grid Points File**	-	280	dsd	1
105	**DSD (R) - RA2 Constants File**	-	280	dsd	1
106	**DSD (R) - RA2 Configuration (System) File for Ocean/Ice2 Processing**	-	280	dsd	1
107	**DSD (R) -RA2 Configuration (System) File for Ice1/Sea Ice Processing**	-	280	dsd	1
108	**DSD (R) - Sea State Bias file**	-	280	dsd	1

Table 14.4.1.7.4-1 RA-2 Level 2-SPH

N	Description	Units	Byte Length	Data Type	Dim.
109	**DSD (R) - Modified Dip Map File**	-	280	dsd	1
110	**DSD (R) - Ionospheric Coefficients File**	-	280	dsd	1
111	**DSD (R) - Cartwright Amplitudes File**	-	280	dsd	1
112	**DSD (R) - Ocean Tide Solution 1 Map File**	-	280	dsd	1
113	**DSD (R) - Loading Tide Solution 1 Map File**	-	280	dsd	1
114	**DSD (R) - Ocean Tide Solution 2 Map File**	-	280	dsd	1
115	**DSD (R) - Loading Tide Solution 2 Map File**	-	280	dsd	1
116	**DSD (R) - Geoid Height Map File**	-	280	dsd	1
117	**DSD (R) - Mean Sea Surface Heights file**	-	280	dsd	1
118	**DSD (R) - Ocean depth/land elevation file**	-	280	dsd	1
119	**DSD (R) - Slope model 1 (Map for Greenland)**	-	280	dsd	1
120	**DSD (R) - Slope model 2 (Map for Antarctica)**	-	280	dsd	1
121	**DSD- Spare (each DSD-Spare is 279 blank space characters followed by one newline character)**	-	280	dsd_sp	1
122	**DSD- Spare (each DSD-Spare is 279 blank space characters followed by one newline character)**	-	280	dsd_sp	1
	size (in bytes)		**17178**		

Note 1: The SPH descriptor value will be set to RA2_MWR_FDGDR for Fast Delivery products, to RA2_MWR_IGDR for Intermediate delivery products, RA2_MWR_GDR for fully consolidated products

Note 2: The DSDs of above fields 73, 74, 79 are always set to 'NOT USED' (see Vol 5, paragraph 5.4.3.3

Note 3: The DSD of field 81 is set to 'NOT USED' in products generated in Near Real Time (FDGDR), It is meaningful only in off-line processing (IGDR and GDR).

The following key words will be used to fill the DS_NAME fields (field 1 in each DSD, refer to Volume 5) for the DSDs listed in the SPH above.

Table 14.4.1.7.4-2 ASCII Strings for DS_NAME Fields

DSD	DS_NAME (field 1)
DSD (M) - for the RA2 MDS	RA2_DATA_SET_FOR_LEVEL_2
DSD (M) - for the MWR MDS	MWR_DATA_SET_FOR_LEVEL_2
DSD (M) - for the 18 Hz Average Waveforms MDS	RA2_AVERAGE_WAVEFORMS
DSD (M) - for the Burst Waveforms MDS	RA2_BURST_WAVEFORMS
DSDs for referenced files	
DSD (R) -Level 1B product from which this product was created	LEVEL_1B_PRODUCT
DSD (R) - For Level-2 parent product	Set to blank spaces if the product is not generated from Level-2 product. Otherwise : set to the SPH descriptor of the level-2 product from which this product was extracted.
DSD (R) for Orbit Data File Used	ORBIT_STATE_VECTOR_FILE
DSD (R) - For DORIS Ionospheric correction file	DORIS_IONO
DSD (R) - RA2 Level 1B IF data file	See Table 14.4.1.6-2
DSD(R) - RA2 Level 1B USO data file	See Table 14.4.1.6-2
DSD (R) - MWR Level 1B side lobe data file	See Table 14.4.1.6-2
DSD (R) - ENVISAT-1 Attitude data file	ATTITUDE_DATA

Table 14.4.1.7.4-2 ASCII Strings for DS_NAME Fields

DSD	DS_NAME (field 1)
DSD (R) - Platform data file	PLATFORM_DATA
DSD (R) - for first ECMWF file used	ECMWF_DATA_FILE_1
DSD (R) - for second ECMWF file used	ECMWF_DATA_FILE_2
DSD (R) - for third ECMWF file used	ECMWF_DATA_FILE_3
DSD (R) - Solar Activity Data File	SOLAR_ACTIVITY_INDEX_PREDICT
DSD (R) - Pole Location Data File	POLE_LOCATION_PREDICTED
DSD (R) - RA2 Level 1B Configuration File	See Table 14.4.1.6-2
DSD (R) - RA2 Level 1B Characterization Data File	See Table 14.4.1.6-2
DSD (R) - MWR Level 1B Configuration File	See Table 14.4.1.6-2
DSD (R) - MWR Level 1B Characterization Data File	See Table 14.4.1.6-2
DSD (R) - MWR Land/Sea Flags Data File	RA2_SURFACE_TYPE_DATA
DSD (R) - Altitude of Meteorological Grid Points File	METEO_GRID_POINTS_ALTITUDE
DSD (R) - RA2 Constants File	See Table 14.4.1.6-2
DSD (R) - RA2 Configuration (System) File for Ocean/Ice2 Processing	OCEAN_ICE2_SYSTEM_FILE
DSD (R) -RA2 Configuration (System) File for Ice1/Sea Ice Processing	ICE1_SEA_ICE_SYSTEM_FILE
DSD (R) - Sea State Bias file	SEA_STATE_BIAS_DATA
DSD (R) - Modified Dip Map File	MODIFIED_DIP_MAP
DSD (R) - Ionosphere Coefficients File	IONOSPHERIC_COEFFICIENTS
DSD (R) - Cartwright Amplitudes File	SET_HARMONIC_COEFF
DSD (R) - Ocean Tide Solution 1 Map File	OCEAN_TIDE_SOLUTION1

Table 14.4.1.7.4-2 ASCII Strings for DS_NAME Fields

DSD	DS_NAME (field 1)
DSD (R) - Ocean Tide Solution 2 Map File	OCEAN_TIDE_SOLUTION2
DSD (R) - Loading Tide Solution 1 Map File	TIDAL_LOAD_SOLUTION1
DSD (R) - Loading Tide Solution 2 Map File	TIDAL_LOAD_SOLUTION2
DSD (R) - Geoid Height Map File	GEOID_MAP
DSD (R) - Mean Sea Surface Heights file	MEAN_SEA_SURFACE_MAP
DSD (R) - Ocean depth/land elevation file	OCEAN_DEPTH_LAND_ELEVATION
DSD (R) - Slope model Map for Greenland	SLOPE_MODEL_MAP_1
DSD (R) - Slope model Map for Antarctica	SLOPE_MODEL_MAP_2

14.5.1.7 Data Sets

The contents of the Data Sets are described in the following sections. Data Sets are in mixed binary format. They may contain ACSII strings, but the ASCII strings are not contained within quotation marks as for the MPH/SPH.

14.5.1.7.1 RA-2 MDS

The RA-2 MDS is composed of several MDSRs (1 MDSR every 1.114s). The MDSR format is described below.

Table 14.5.1.7.1-1 Level 2 RA-2 MDSR

N	Description	Units	Byte Length	Data Type	Dim.
1	**MDSR Time stamp** Time fields based on UTC are computed for each record and referred to the center of the averaged waveform.	-	12	mjd	1
2	**Quality Indicator (-1 for blank MDSR, 0 otherwise)**	-	1	sc	1
3	**Spare (See Note 4, for differences in this field between NRT and OFL level2 products)**	-	3	uc	3
4	**Geodetic Latitude (positive N, negative S)**	$1x10^{-6}$ deg	4	sl	1
5	**Longitude (positive E, 0 at Greenwich, negative W)**	$1x10^{-6}$ deg	4	sl	1
6	**Source Packet Counter**	-	4	ul	1
7	**Instrument Mode ID**	flags	4	ul	1
8	**Measurement Confidence Data (See Note 1)**	flags	4	ul	1
	Orbit Information				
9	**Altitude of CoG above reference ellipsoid**	mm	4	ul	1
10	**18 Hz altitude differences from 1 Hz altitude [20]**	mm	40	ss	20
11	**Instantaneous altitude rate**	mm/s	2	ss	1

Table 14.5.1.7.1-1 Level 2 RA-2 MDSR

N	Description	Units	Byte Length	Data Type	Dim.
12	**Spare (see Note 4)**	-	50	uc	50
	Range Information				
13	**18 Hz Ku tracker range referenced to the COG (no Doppler correction) [20]**	mm	80	ul	20
14	**18 Hz S tracker range referenced to the COG (no Doppler correction) [20]**	mm	80	ul	20
15	**Map of valid points for 18 Hz Ku-band tracker range** First 20 least significant bits (bits 0-19) correspond to the 20 values (one per data block) containing: 0= valid measurement, 1= invalid. Bit 0 applies to the first data block. Unused bits set to 0.	flags	4	ul	1
16	**Spare (see Note 4)**	-	4	uc	4
17	**Ku-band ocean range**	mm	4	ul	1
18	**S-band ocean range**	mm	4	ul	1
19	**18 Hz Ku-band ocean ranges [20]**	mm	80	ul	20
20	**18 Hz S-band ocean ranges [20]**	mm	80	ul	20
21	**Standard deviation of 18 Hz Ku-band ocean range**	mm	2	us	1
22	**Standard deviation of 18 Hz S-band ocean range**	mm	2	us	1
23	**Number of 18 Hz valid points for Ku-band ocean range**	-	2	us	1
24	**Number of 18 Hz valid points for S-band ocean range**	-	2	us	1
25	**Map of 18 Hz valid points for Ku-band ocean range** First 20 least significant bits (bits 0-19) correspond to the 20 values (one per data block) containing: 0= valid measurement, 1= invalid. Bit 0 applies to the first data block. Unused bits set to 0.	flags	4	ul	1

Table 14.5.1.7.1-1 Level 2 RA-2 MDSR

N	Description		Units	Byte Length	Data Type	Dim.
26	**Map of 18 Hz valid points for S-band ocean range** First 20 least significant bits (bits 0-19) correspond to the 20 values (one per data block) containing: 0= valid measurement, 1= invalid. Bit 0 applies to the first data block. Unused bits set to 0.		flags	4	ul	1
27	**18 Hz Ku-band ice1 ranges [20]**		mm	80	ul	20
28	**18 Hz S-band ice1 ranges [20]**		mm	80	ul	20
29	**18 Hz Ku-band ice2 ranges [20]**		mm	80	ul	20
30	**18 Hz S-band ice2 ranges [20]**		mm	80	ul	20
31	**18 Hz Ku-band sea-ice ranges [20]**		mm	80	ul	20
32	***Only for NRT products:***	**Spare (See Note 4) .**		80	uc	80
	***ONLY for OFL products*:**	**18 Hz latitudes differences from 1Hz [20]**	$10x10^{-6}$ deg	40	ss	20
		18 Hz longitudes differences from 1Hz [20]	$10x10^{-6}$ deg	40	ss	20
	Range Corrections Information					
33	**18 Hz Ku-band range instrumental correction [20]**		mm	40	ss	20
34	**18 Hz S-band range instrumental correction [20]**		mm	40	ss	20
35	**18 Hz Ku-band Doppler correction [20]**		mm	40	ss	20
36	**18 Hz S-band Doppler correction [20]**		mm	40	ss	20
37	**18 Hz Ku-band Delta Doppler Slope correction [20]**		mm	40	ss	20
38	**18 Hz S-band Delta Doppler Slope correction [20]**		mm	40	ss	20
39	**Model dry tropospheric correction**		mm	2	ss	1

Table 14.5.1.7.1-1 Level 2 RA-2 MDSR

N	Description		Units	Byte Length	Data Type	Dim.
40	**Inverted barometer correction**		mm	2	ss	1
41	**Model wet tropospheric correction**		mm	2	ss	1
42	**MWR derived wet tropospheric correction**		mm	2	ss	1
43	**RA2 ionospheric correction on Ku-band**		mm	2	ss	1
44	**RA2 ionospheric correction on S-band**		mm	2	ss	1
45	**Ionospheric correction from DORIS on Ku-band**		mm	2	ss	1
46	**Ionospheric correction from DORIS on S-band**		mm	2	ss	1
47	**Ionospheric correction from model on Ku-band**		mm	2	ss	1
48	**Ionospheric correction from model on S-band**		mm	2	ss	1
49	**Sea state bias correction on Ku-band**		mm	2	ss	1
50	**Sea state bias correction on S-band**		mm	2	ss	1
51	***Only for NRT products:***	**Spare (see Note 4).**	-	12	uc	1
	Only for OFL products:	**DIB_HF** for GDR/MWS. The DIB value has been coded as a difference from the IB value; default value is set for IGDR product**.**	mm	2	ss	1
		Spare (see Note 4)		10	uc	1
	Significant Wave Height Information					
52	**Square of Ku-band Significant wave height**		mm^2	4	sl	1
53	**Square of S-band Significant wave height**		mm^2	4	sl	1
54	**Ku-band Significant Wave Height**		mm	2	ss	1
55	**S-Band Significant Wave Height**		mm	2	ss	1

Table 14.5.1.7.1-1 Level 2 RA-2 MDSR

N	Description	Units	Byte Length	Data Type	Dim.
56	**Standard deviation of 18 Hz Ku-band SWH**	mm	2	ss	1
57	**Standard deviation of 18 Hz S-band SWH**	mm	2	ss	1
58	**Number of 18 Hz valid points for Ku-band ocean SWH**	-	2	us	1
59	**Number of 18 Hz valid points for S-band ocean SWH**	-	2	us	1
60	**Slope model present flags [20 bits]** First 20 least significant bits (bits 0-19) correspond to the 20 values (one per data block) containing: 0= valid measurement, 1= invalid. Bit 0 applies to the first data block. Unused bits set to 0.	flags	4	ul	1
61	**1 Hz Elevation of echoing point**	cm	4	sl	1
62	**18 Hz Elevation differences of echoing point from mean[20]**	cm	40	ss	20
63	**18 Hz slope-corrected latitude differences from 1 Hz latitude [20]**	$10x10^{-6}$ deg	40	ss	20
64	**18 Hz slope-corrected longitude differences from 1 Hz longitude [20]**	$10x10^{-6}$ deg	40	ss	20
65	**18 Hz Ku-band Ice 2 leading edge width [20]**	mm	40	ss	20
66	**18 Hz S-band Ice 2 leading edge width [20]**	mm	40	ss	20
67	**Spare (see Note 4)**	-	40	uc	40
	Backscatter Information				
68	**18 Hz Ku-band K_cal_Ku [20]**	dB/100	40	ss	20
69	**18 Hz S-band K_cal_S [20]**	dB/100	40	ss	20

Table 14.5.1.7.1-1 Level 2 RA-2 MDSR

N	Description	Units	Byte Length	Data Type	Dim.
70	**Map of valid points for 18 Hz K_cal_Ku** First 20 least significant bits (bits 0-19) correspond to the 20 values (one per data block) containing: 0= valid measurement, 1= invalid. Bit 0 applies to the first data block. Unused bits set to 0.	flags	4	ul	1
71	**Spare (see Note 4)**	-	4	uc	4
72	**Ku-band corrected Ocean backscatter coefficient**	dB/100	2	ss	1
73	**S-band corrected Ocean backscatter coefficient**	dB/100	2	ss	1
74	**Standard deviation of 18 Hz Ku-band ocean backscatter coefficient**	dB/100	2	ss	1
75	**Standard deviation of 18 Hz S-band ocean backscatter coefficient**	dB/100	2	ss	1
76	**Number of 18 Hz valid points for Ku-band ocean backscatter coefficient**	-	2	us	1
77	**Number of 18 Hz valid points for S-band ocean backscatter coefficient**	-	2	us	1
78	**18 Hz Ku-band Ice1 backscatter coefficient [20]**	dB/100	40	ss	20
79	**18 Hz S-band Ice1 backscatter coefficient [20]**	dB/100	40	ss	20
80	**18 Hz Ku-band Ice2 leading edge backscatter coefficient [20]**	dB/100	40	ss	20
81	**18 Hz S-band Ice2 leading edge backscatter coefficient [20]**	dB/100	40	ss	20
82	**18 Hz Ku-band Ice2 backscatter coefficient [20]**	dB/100	40	ss	20
83	**18 Hz S-band Ice2 backscatter coefficient [20]**	dB/100	40	ss	20
84	**18 Hz Ku-band sea-ice backscatter coefficient [20]**	dB/100	40	ss	20
85	**Spare (see Note 4)**	-	40	uc	40

Table 14.5.1.7.1-1 Level 2 RA-2 MDSR

N	Description	Units	Byte Length	Data Type	Dim.
	Backscatter Corrections Information				
86	**Ku-band net instrumental correction for AGC**	dB/100	2	ss	1
87	**S-band net instrumental correction for AGC**	dB/100	2	ss	1
88	**Ku-band atmospheric attenuation correction**	dB/100	2	ss	1
89	**S-band atmospheric attenuation correction**	dB/100	2	ss	1
90	**Ku band rain attenuation**	dB/100	4	sl	1
	Off-nadir Angle Information				
91	**Square of the satellite off nadir angle from platform data**	$deg^2/10^4$	2	ss	1
92	**Square of the satellite off nadir angle from waveform data**	$deg^2/10^4$	2	ss	1
93	**18 Hz Ku-band slope of the first part of the trailing edge from ice-2 retracker [20]**	s^{-1}	80	sl	20
94	**18 Hz S-band slope of the first part of the trailing edge from ice-2 retracker [20]**	s^{-1}	80	sl	20
95	**18 Hz Ku-band slope of the second part of the trailing edge from ice-2 retracker [20]**	s^{-1}	80	sl	20
96	**18 Hz S-band slope of the second part of the trailing edge from ice-2 retracker [20]**	s^{-1}	80	sl	20
97	**Spare (see Note 4)**	-	40	uc	40
	Geophysical Information				
98	**Mean sea-surface height**	mm	4	sl	1
99	**Geoid height**	mm	4	sl	1
100	**Ocean depth/land elevation**	mm	4	sl	1
101	**Total geocentric ocean tide height (solution 1)**	mm	2	ss	1
102	**Total geocentric ocean tide height (solution 2)**	mm	2	ss	1

Table 14.5.1.7.1-1 Level 2 RA-2 MDSR

N	Description	Units	Byte Length	Data Type	Dim.
103	**Long period Tide height**	mm	2	ss	1
104	**Tidal loading height (solution 2)**	mm	2	ss	1
105	**Solid earth tide height**	mm	2	ss	1
106	**Geocentric pole tide height**	mm	2	ss	1
107	**Model surface atmospheric pressure**	10 Pa	2	ss	1
108	**MWR water vapour content**	10^{-2} g/cm^2	2	ss	1
109	**MWR liquid water content**	10^{-2} kg/m^2	2	ss	1
110	**RA2 Total electron content**	10^{-1} TECU	2	ss	1
111	**RA2 wind speed**	mm/s	2	ss	1
112	**U-component of the model wind vector**	mm/s	2	ss	1
113	**V-component of the model wind vector**	mm/s	2	ss	1
114	**Tidal loading height (solution 1)**	mm	2	ss	1
115	**Spare (see Note 4)**	-	8	uc	1
	MWR Information				
116	**Interpolated 23.8 GHz brightness temperature from MWR**	K/100	2	ss	1
117	**Interpolated 36.5 GHz brightness temperature from MWR**	K/100	2	ss	1
118	**Interpolated standard deviation of MWR 23.8 GHz brightness temperature**	K/100	2	ss	1
119	**Interpolated standard deviation of MWR 36.5 GHz brightness temperature**	K/100	2	ss	1
120	**Spare (see Note 4)**	-	2	uc	1
	Flags and Other Quality Information				

Table 14.5.1.7.1-1 Level 2 RA-2 MDSR

N	Description	Units	Byte Length	Data Type	Dim.
121	**Average Ku chirp band:** Ku chirp band Id value associated to the minimum of the 20 elementary chirp band id indexes (i.e. 0 -> 320 MHz, 1 -> 80 MHz, 2 -> 20 MHz)	–	2	us	1
122	**Ku chirp band id [40 bits]** First 40 least significant bits (bits 0-39) correspond to the 20 values (2 bits per data block) - bits 0 and 1 apply to the first data block, Unused bits set to 0	flags	8	ul	2
123	**Error flag for chirp band id [20 bits]** First 20 least significant bits (bits 0-19) correspond to the 20 values (1 per data block), bit 0 applies to the first data block. A bit is set to 0 for a valid measurement, 1 for an invalid measurement. Unused bits set to 0.	flags	4	ul	1
124	**Instrument flag (See Note 2)**	flags	4	ul	1
125	**Fault identifier [20 bits]** First 20 least significant bits (bits 0-19) correspond to the 20 values (1 per data block), bit 0 applies to the first data block. A bit is set to 0 for a valid measurement, 1 for an invalid measurement. Unused bits set to 0.	flags	8	ul	2
126	**Spare (See note 4)**	-	8	uc	8
127	**Waveforms samples fault identifier [40 bits]** First 40 least significant bits (bits 0-39) correspond to the 20 values (2 bits per data block) - bits 0 and 1 apply to the first data block, Unused bits set to 0	flags	8	ul	2
128	**Instrument mode ID at data block level [80 bits]** First 80 least significant bits (bits 0-79) correspond to the 20 values (4 bits per data block), bits 0 to 3 apply to the first data block. Unused bits set to 0.	flags	12	ul	3
129	**No. of measures for Ku flight calibration factor evaluation**	-	2	us	1
130	**No. of measures for S flight calibration factor evaluation**	-	2	us	1
131	**MWR instrument flag (as defined in Table**	flags	2	us	1

Table 14.5.1.7.1-1 Level 2 RA-2 MDSR

N	Description	Units	Byte Length	Data Type	Dim.
	14.4.1.7.4-3)				
132	**Spare (See note 4)**	-	6	uc	6
133	**Spare (See note 4)**	-	8	uc	8
134	**Spare (See note 4)**	-	8	uc	8
135	**Ku-band ocean retracking quality [20 bits]** First 20 least significant bits (bits 0-19) correspond to the 20 values (one per data block) containing: 0= valid measurement, 1= invalid. Bit 0 applies to the first data block. Unused bits set to 0.	flags	4	ul	1
136	**S-band ocean retracking quality [20 bits]** First 20 least significant bits (bits 0-19) correspond to the 20 values (one per data block) containing: 0= valid measurement, 1= invalid. Bit 0 applies to the first data block. Unused bits set to 0.	flags	4	ul	1
137	**Ku-band ice1 retracking quality [20 bits]** First 20 least significant bits (bits 0-19) correspond to the 20 values (one per data block) containing: 0= valid measurement, 1= invalid. Bit 0 applies to the first data block. Unused bits set to 0.	flags	4	ul	1
138	**S-band ice1 retracking quality [20 bits]** First 20 least significant bits (bits 0-19) correspond to the 20 values (one per data block) containing: 0= valid measurement, 1= invalid. Bit 0 applies to the first data block. Unused bits set to 0.	flags	4	ul	1
139	**Ku-band ice2 retracking quality [20 bits]** First 20 least significant bits (bits 0-19) correspond to the 20 values (one per data block) containing: 0= valid measurement, 1= invalid. Bit 0 applies to the first data block. Unused bits set to 0.	flags	4	ul	1

Table 14.5.1.7.1-1 Level 2 RA-2 MDSR

N	Description	Units	Byte Length	Data Type	Dim.
140	**S-band ice2 retracking quality [20 bits]** First 20 least significant bits (bits 0-19) correspond to the 20 values (one per data block) containing: 0= valid measurement, 1= invalid. Bit 0 applies to the first data block. Unused bits set to 0.	flags	4	ul	1
141	**Ku-band sea-ice retracking quality [20 bits]** First 20 least significant bits (bits 0-19) correspond to the 20 values (one per data block) containing: 0= valid measurement, 1= invalid. Bit 0 applies to the first data block. Unused bits set to 0.	flags	4	ul	1
142	**1 Hz Ku-band peakiness**	10^{-3}	2	us	1
143	**1 Hz S-band peakiness**	10^{-3}	2	us	1
144	**Altimeter surface type flag**	flags	2	us	1
145	**Radiometer land/ocean flag**	flags	2	us	1
146	**MWR Quality interpolation flag**	flags	2	us	1
147	**Altimeter rain flag (See Note 5)**	flags	2	us	1
148	**Interpolation Flag (See Note 3)**	flags	2	us	1
149	**Sea ice flag (see Note 6)**	flags	1	uc	1
150	**Membership 1**	flags	1	uc	1
151	**Membership 2**	flags	1	uc	1
152	**Membership 3**	flags	1	uc	1
153	**Membership 4**	flags	1	uc	1
154	**Spare (See note 4)**	-	1	uc	1
	size (in bytes)		**2492**		

Note 1: Definition of MCD Flags for NRT products.

The following table defines the flags in the MCD field. The bit numbering convention is defined in Volume A.

Table 14.5.1.7.1-2 Definition of Flags in the MCD Field for NRT products[9]

Bit position		Description	Values
ul integer	bits 31-30	Orbit propagator status flag for *initialisation* mode.	0: several errors, no result 1: no errors 2: warning detected
	bits29-28	Orbit propagator status flag for *propagation* mode.	0: several errors, no result 1: no errors 2: warning detected
	bit 27	Orbit Quality Flag	0:Propagator used 1:Interpolator used
	bits 26-25	Meteo data state	0: 2 maps nominal 1: 2 maps degraded 2: 1 map 3: no map
	bit 24	Absence of processing error (arithmetic faults)	o: ok 1: error
	bit 23	Spare	0
	bit 22	Ku Sea Ice retracking OK	o: ok

9

bits 31-16 are generated by the Level 2 processing,

bits 15-13 : spare,

bit 12 comes from the MWR Level 1B MCD (Table 14.4.1.7.4-2), bit 30,

bit 11 comes from the MWR Level 1B MCD (Table 14.4.1.7.4-2), bit 31,

bits 10-8 come from the MWR Level 1B MCD (Table 14.4.1.7.4-2), bits 24-22,

bit 6 comes from the RA2 Level 1B MCD (Table 14.4.1.7.1-3), summary of bits 21-20,

bits 5-0 come from the RA2 Level 1B MCD (Table 14.4.1.7.1-3), bits 27-22.

Table 14.5.1.7.1-2 Definition of Flags in the MCD Field for NRT products[9]

Bit position		Description	Values
			1: error
	bit 21	S Ice 2 retracking OK	o: ok 1: error
	bit 20	Ku Ice 2 retracking OK	o: ok 1: error
	bit 19	S Ice 1 retracking OK	o: ok 1: error
	bit 18	Ku Ice 1 retracking OK	o: ok 1: error
	bit 17	S Ocean retracking OK	o: ok 1: error
	bit 16	Ku Ocean retracking OK	o: ok 1: error
	bits 15-13	Spare	0
	bit 12	Brightness Temperature Range check (channel 2)	0: in range 1: out of range
	bit 11	Brightness Temperature Range check (channel 1)	0: in range 1: out of range
	bits 10-8	Validity	-
	bit 7	S-Band Anomaly flag	0: no errors 1: error
	bit 6	Wave form samples fault identifier	0: no errors 1: error
	bit 5	Rx delay Fault Identifier	0: no error 1: Rx distance out of range
	bit 4	AGC Fault Identifier	0: no error 1: AGC out of range

Table 14.5.1.7.1-2 Definition of Flags in the MCD Field for NRT products[9]

Bit position		Description	Values
	bit 3	Fault Identifier	0: no errors detected 1: errors detected by on-board
	bit 2	USO validity flag	0: no errors detected 1: anomaly in USO value detected
	bit 1	OBDH validity flag	0: no errors detected 1: anomaly in OBDH value detected
	bit 0	Packet Length Error flag	0: no error detected 1: error detected and attempt to recover made

Note 1[bis]: Definition of MCD Flags for OFL products. The following table defines the flags in the MCD field. The bit numbering convention is defined in Volume A.

Table 14.5.1.7.1-3 Definition of Flags in the MCD Field for OFL products[10]

Bit position		Description	Values
ul integer	bits 28-31	Orbital processing status in OFL products	**0011**: Adjusted preliminary/ precise DORIS orbit **0100**:Estimated preliminary/ precise DORIS orbit during manoeuvre **0101**:Estimated preliminary/ precise DORIS orbit after interpolation (data gap) **0110**:Estimated preliminary/ precise DORIS orbit extrapolated on a time interval <1 day

10

bits 31-16 are generated by the Level 2 processing,

bits 15-13 : spare,

bit 12 comes from the MWR Level 1B MCD (Table 14.4.1.7.4-2), bit 30,

bit 11 comes from the MWR Level 1B MCD (Table 14.4.1.7.4-2), bit 31,

bits 10-8 come from the MWR Level 1B MCD (Table 14.4.1.7.4-2), bits 24-22,

bit 7 : spare,

bit 6 comes from the RA2 Level 1B MCD (Table 14.4.1.7.1-3), summary of bits 21-20,

bits 5-0 come from the RA2 Level 1B MCD (Table 14.4.1.7.1-3), bits 27-22.

Table 14.5.1.7.1-3 Definition of Flags in the MCD Field for OFL products[10]

Bit position		Description	Values
			0111:Estimated preliminary/ precise DORIS orbit extrapolated on a time interval >1 day but <2 days **1000**:Estimated preliminary/ precise DORIS orbit extrapolated on a time interval >2 days or after manoeuvre
	bit 27	spare	0
	bits 26-25	Meteo data state	0: 2 maps nominal 1: 2 maps degraded 2: 1 map 3: no map
	bit 24	Absence of processing error (arithmetic faults)	o: ok 1: error
	bit 23	Spare	0
	bit 22	Ku Sea Ice retracking OK	o: ok 1: error
	bit 21	S Ice 2 retracking OK	o: ok 1: error
	bit 20	Ku Ice 2 retracking OK	o: ok 1: error
	bit 19	S Ice 1 retracking OK	o: ok 1: error
	bit 18	Ku Ice 1 retracking OK	o: ok 1: error
	bit 17	S Ocean retracking OK	o: ok 1: error
	bit 16	Ku Ocean retracking OK	o: ok

Table 14.5.1.7.1-3 Definition of Flags in the MCD Field for OFL products[10]

Bit position		Description	Values
			1: error
	bits 15-13	Spare	0
	bit 12	Brightness Temperature Range check (channel 2)	0: in range 1: out of range
	bit 11	Brightness Temperature Range check (channel 1)	0: in range 1: out of range
	bits 10-8	Validity	-
	bit 7	S-Band Anomaly flag	0: no errors 1: error
	bit 6	Wave form samples fault identifier	0: no errors 1: error
	bit 5	Rx delay Fault Identifier	0: no error 1: Rx distance out of range
	bit 4	AGC Fault Identifier	0: no error 1: AGC out of range
	bit 3	Fault Identifier	0: no errors detected 1: errors detected by on- board
	bit 2	USO validity flag	0: no errors detected 1: anomaly in USO value detected
	bit 1	OBDH validity flag	0: no errors detected 1: anomaly in OBDH value detected
	bit 0	Packet Length Error flag	0: no error detected 1: error detected and attempt to recover made

Note 2: Definition of RA2 Instrument Flag

The following table defines the flags in the field. The bit numbering convention is

defined in Volume A.

Table 14.5.1.7.1-4 Definition of Flags in the RA2 Instrument Flags Field[11]

Bit position		Description	Values
ul integer	bits 31-7	spare	0
	bit 6	Flag for availability of S flight calibration corrections	-
	bit 5	Flag for availability of Ku flight calibration corrections	-
	bits 4-2	PTR calibration band identifier field	-
	bits 1-0	Error flag for decoded redundancy flags	-

Note 3: Definition of the Interpolation Flag

The following table defines the flags in the field. The bit numbering convention is defined in Volume A.

Table 14.5.1.7.1-5 Definition of Flags in the Interpolation Flags Field

Bit position		Description	Values
us integer	bits 15-4	spare	0
	bit 3	Meteorological data interpolation flag	-
	bit 2	Ocean tide solution 2 interpolation flag	-

11 RA2 Instrument Flags come from the RA2 Level 1B MCD (Table 14.4.1.7.1-3)

	bit 1	Ocean tide solution 1 interpolation flag	-
	bit 0	MSS Interpolation flag	-

Note 4: The spare fields will always be set to zero, according to Annex A (Paragraph A.2.3) of Products Specifications.

FIELD 3: On level2 products produced with the OFL CMA processor this field will contain the software version of the RA2 IPF used to process the input level1 and is defined as “Level 1B software number” of three bytes. As an example, if the IPF version used is 4.58, the "Level 1B software number" value will be set to 458.

Note 5: Definition of the Altimeter Rain Flag

The following table defines the flags in the field. The bit numbering convention is defined in Volume A.

Table 14.5.1.7.1-6 Definition of Rain Flag

	Bit position	Description	Values
us integer	bits 15-3	spare	0
	bits 2-0	Altimeter Rain flag	0 = “no rain” 1 = “rain” 2 = “high rain probability from altimeter” 3 = “high probability of no rain from altimeter”

Table 14.5.1.7.1-6 Definition of Rain Flag

			4 = "ambiguous situation" i.e. possibility of ice 5 = "evaluation not possible" (i.e. data are missing or surface type is land or ice or s0_Ku < 0 or s0_S < 0)

Note 6: Definition of the Sea-Ice Flag

The following table defines the flags in the field. The bit numbering convention is defined in Volume A.

Table 14.5.1.7.1-7 Definition of Sea Ice Flag

Bit position		Description	Values
uc (1 byte)	bits 7-1	spare	0
	bit 0	Sea-Ice flag	0 = "ocean" 1 = "sea-ice" 2 = "not evaluated"

14.5.1.7.2 MWR MDS

This MDS contains the MWR data used during processing. The format is identical to that described in Section 14.4.1.7.4.

14.5.1.8 Estimated Size

The estimated size of the Geophysical Data Record product for one half orbit is determined as follows:

MPH: 1247 bytes

SPH: 17178 bytes

RA-2 MDS: 2492 bytes/MDSR * 2711 MDSRs = 6.756 MB

MWR MDS: 88 bytes/MDSR * 2516 MDSRs = 222 kBytes

TOTAL: 7 MB

These values are based on the following assumptions:

- 3020 seconds per half orbit
- one RA2 MDSR 55.7 ms *20 = 1.114 seconds
- one MWR MDS per 1.2 seconds

14.5.2 RA-2 Sensor Data Record

The Sensor Data Record is a combination of the fully consolidated Geophysical Data Record product and the fully consolidated Geolocated and Calibrated Altimeter Waveforms with TOA Microwave Brightness Temperature (Level 1B) product. It is thus the most accurate and complete record of RA-2 performance available. The product is available from the PAC, 50 days after data acquisition.

14.5.2.1 Input Data

Fully consolidated Level 1B product and RA2_GDR_2P.

14.5.2.2 Auxiliary Data Used

Same as for the Level 1B and Geophysical Data Record products.

14.5.2.3 Processing Performed

No further processing is applied to create this product after the fully consolidated Geophysical Record product has been created.

14.5.2.4 Product Structure

The overall product structure is described below.

Table 14.5.1.7.2-1 Level 2 SGDR Product Structure

MPH
Level 2 SDR- SPH
RA-2 MDS (from the GDR product)
MWR MDS (from the GDR product)
18 Hz Waveforms MDS
Burst Waveforms MDS

14.5.2.5 Main Product Header

The MPH is described in Volume 5.

14.5.2.6 Specific Product Header

The format of the SPH is shown in the table below.

Table 14.5.1.7.2-1 RA-2 Level 2 SDR - SPH

N	Description	Units	Byte Length	Data Type	Dim.
1-70	**Fields 1-70 of Table 14.5.1.6-1. Field 1 set to RA2_MWR_SGDR.**	-	2618	-	-
	DSDs for included Data Sets				
71	**DSD (M) - for the RA2 MDS**	-	280	dsd	1
72	**DSD (M) - for the MWR MDS**	-	280	dsd	1
73	**DSD (M) - for the 18 Hz Waveforms MDS**	-	280	dsd	1
74	**DSD (M) - for the Burst Waveforms MDS (if not included in product set this DSD to NOT USED as described in Volume 5)**	-	280	dsd	1
75	**DSD- Spare Reserved (each DSD-Spare is 279 blank space characters followed by one newline character)**	-	280	dsd_sp	1
76	**DSD- Spare Reserved (each DSD-Spare is 279 blank space characters followed by one newline character)**	-	280	dsd_sp	1
77	**DSD- Spare (each DSD-Spare is 279 blank space characters followed by one newline character)**	-	280	dsd_sp	1
	DSDs for referenced files				

Table 14.5.1.7.2-1 RA-2 Level 2 SDR - SPH

N	Description	Units	Byte Length	Data Type	Dim.
78	**DSD (R) -Level 1B product from which this product was created**	-	280	dsd	1
79	**DSD (R) - For Level-2 parent product** (Note 1)	-	280	dsd	1
80	**DSD (R) for Orbit Data File Used**	-	280	dsd	1
81	**DSD (R) - For DORIS Ionospheric correction file**	-	280	dsd	1
82	**DSD (R) - RA2 Level 1B IF data file**	-	280	dsd	1
83	**DSD(R) - RA2 Level 1B USO data file**	-	280	dsd	1
84	**DSD (R) - MWR Level 1B side lobe data file**	-	280	dsd	1
85	**DSD- Spare (each DSD-Spare is 279 blank space characters followed by one newline character)**	-	280	dsd_sp	1
86	**DSD (R) - referencing the ENVISAT-1 Attitude data file**	-	280	dsd	1
87	**DSD- Spare (each DSD-Spare is 279 blank space characters followed by one newline character)**	-	280	dsd_sp	1
88	**DSD (R) - Platform data file**	-	280	dsd	1
89	**DSD (R) -for first ECMWF file used**	-	280	dsd	1
90	**DSD (R) - for second ECMWF file used**	-	280	dsd	1
91	**DSD (R) - for third ECMWF file used**	-	280	dsd	1
92	**DSD (R) - Solar Activity Data File**	-	280	dsd	1
93	**DSD (R) - Pole Location Data File**	-	280	dsd	1
94	**DSD- Spare (each DSD-Spare is 279 blank space characters followed by one newline character)**	-	280	dsd_sp	1
95	**DSD- Spare (each DSD-Spare is 279 blank space characters followed by one newline character)**	-	280	dsd_sp	1

Table 14.5.1.7.2-1 RA-2 Level 2 SDR - SPH

N	Description	Units	Byte Length	Data Type	Dim.
96	**DSD- Spare (each DSD-Spare is 279 blank space characters followed by one newline character)**	-	280	dsd_sp	1
97	**DSD (R) - RA2 Level 1B Configuration File**	-	280	dsd	1
98	**DSD (R) - RA2 Level 1B Characterization Data File**	-	280	dsd	1
99	**DSD (R) - MWR Level 1B Configuration File**	-	280	dsd	1
100	**DSD (R) - MWR Level 1B Characterization Data File**	-	280	dsd	1
101	**DSD (R) - MWR Land/Sea Flags Data File**	-	280	dsd	1
102	**DSD- Spare (each DSD-Spare is 279 blank space characters followed by one newline character)**	-	280	dsd_sp	1
103	**DSD- Spare (each DSD-Spare is 279 blank space characters followed by one newline character)**	-	280	dsd_sp	1
104	**DSD (R) - Altitude of Meteo Grid Points File**	-	280	dsd	1
105	**DSD (R) - RA2 Constants File**	-	280	dsd	1
106	**DSD (R) - RA2 Configuration (System) File for Ocean/Ice2 Processing**	-	280	dsd	1
107	**DSD (R) -RA2 Configuration (System) File for Ice1/Sea Ice Processing**	-	280	dsd	1
108	**DSD (R) - Sea State Bias file**	-	280	dsd	1
109	**DSD (R) - Modified Dip Map File**	-	280	dsd	1
110	**DSD (R) - Ionospheric Coefficients File**	-	280	dsd	1
111	**DSD (R) - Cartwright Amplitudes File**	-	280	dsd	1
112	**DSD (R) - Ocean Tide Solution 1 Map File (orthotide)**	-	280	dsd	1
113	**DSD (R) - Loading Tide Solution1 Map File**	-	280	dsd	1

Table 14.5.1.7.2-1 RA-2 Level 2 SDR - SPH

N	Description	Units	Byte Length	Data Type	Dim.
114	**DSD (R) - Ocean Tide Solution 2 Map File (harmonic)**	-	280	dsd	1
115	**DSD (R) - Loading Tide Solution2 Map File**	-	280	dsd	1
116	**DSD (R) - Geoid Height Map File**	-	280	dsd	1
117	**DSD (R) - Mean Sea Surface Heights file**	-	280	dsd	1
118	**DSD (R) - Ocean depth/land elevation file**	-	280	dsd	1
119	**DSD (R) - Slope model Map for Greenland**	-	280	dsd	1
120	**DSD (R) - Slope model Map for Antarctica**	-	280	dsd	1
121	**DSD- Spare (each DSD-Spare is 279 blank space characters followed by one newline character)**	-	280	dsd_sp	1
122	**DSD- Spare (each DSD-Spare is 279 blank space characters followed by one newline character)**	-	280	dsd_sp	1
	size (in bytes)		**17178**		

Note 1: The DSD for field 79 will always be set to 'NOT USED' as described in Vol 5, paragraph 5.4.3.3

The DS_NAME fields in the DSDs are filled as per table 14.5.1.6-2.

14.5.2.7 Data Sets

The contents of the Data Sets are described in the following sections. Data Sets are in mixed binary format. They may contain ACSII strings, but the ASCII strings are not contained within quotation marks as for the MPH/SPH.

14.5.2.7.1 RA-2 MDS

Format described in Section 14.5.1.7.1.

14.5.2.7.2 MWR MDS

Format described in Section 14.4.1.7.4.

14.5.2.7.3 18-Hz Waveforms MDS

The averaged waveforms MDS is detailed below. It is updated with a new MDSR at 18 Hz rate.

Table 14.5.2.7.3-1 18-Hz Waveforms MDSR

N	Description	Units	Byte Size	Data Type	Dim.
1	**Time stamp**	-	12	mjd	1
2	**Quality Indicator (-1 for blank MDSR, 0 otherwise)**	-	1	sc	1
3	**Spare (Note 1)**	-	3	uc	3
4	**Source Packet Counter**	-	4	ul	1
5	**Spare (Note 1)**	-	8	ul	2
	Data Block Information				
6	**Data Block information (see structure definition below). The structure is repeated 20 times, once for each data block.**	-	8560	block_ info	20

TOTAL		**8588**		

Table 14.5.2.7.3-2 Format of block_info Structure

N	Description	Units	Byte Size	Data Type	Dim.
	waveforms data				
1	**Average Ku band waveforms corrected for IF transfer function (128 samples)**	1/2048	256	us	128
2	**Central Ku band filters from DFT corrected for IF transfer function (2 samples)**	1/2048	4	us	2
3	**Average S band waveforms corrected for IF transfer function (64 samples)**	1/8192	128	us	64
4	**Indexes of 2 DFT samples**	-	4	ss	2
5	**Δoffset in FFT filters units**	1/256	2	ss	1
6	**Spare (Note 1)**	-	18	us	9
	power information				
7	**Noise power measurement**	1/2048	2	ss	1
8	**AGC of noise power measurement**	10^{-2}	2	ss	1
9	**reference power value**	dB/100	2	us	1
10	**spare (Note 1)**	-	10	us	5
TOTAL			**428**		

Note 1: The spare fields will always be set to zero, according to Annex A (Paragraph A.2.3) of Products Specifications.

14.5.2.7.4 Burst Waveforms MDS

Format described in Section 14.4.1.7.2.

14.5.2.8 Estimated Size

The estimated size of the Sensor Data Record product for one half orbit is calculated as follows:

MPH: 1247 bytes

SPH: 17178 bytes

RA-2 MDS: 2492 bytes/MDSR *2711 MDSRs = 6.756 MB

MWR MDS: 88 bytes / MDSR * 2516 MDSRs = 222 kBytes

18-Hz MDS: 8588 bytes/MDSR * 2711 MDSRs = 23.282 MB

Burst Waveforms MDS: 3242 bytes / MDSR * 2711 MDSRs = 8.789 MB

TOTAL: 40 MB (max.), 31 MB if burst waveforms are not included

These values are based on the following assumptions:

- 3020 seconds per half orbit
- one RA2 MDSR and one 18-Hz MDSR and one Burst Waveforms MDSR per 55.7 ms * 20 = 1.114 seconds
- one MWR MDSR per 1.2 seconds

14.5.3 RA-2 Wind/Wave Product for Meteo Users

The structure of this product in its two consolidation levels (FDMAR = Fast Delivery Marine Abridge Record, built from RA2_FGD_2P product and IMAR=Intermediate Marine Abridged Record, built from RA2_IGD_2P product) IMAR will be drastically better since it will include the orbit, the retracking, geophysical corrections and the MWR water vapour measurements. FDMAR is available in NRT (3 hours after acquisition) while IMAR is available 35 days later and contains wind speed, wave height, range and orbita latitude. They contain RA2 and MWR data for meteocean users. The FDMAR product corresponds to a segment of the orbit, while the IMAR spans half an orbit, i.e. a pass from pole to pole.

14.5.3.1 Input Data

Extracted from RA2_FGD_2P or RA2_IGD_2P products.

14.5.3.2 Auxiliary Data Used

Same as for Geophysical Data Record.

14.5.3.3 Processing Performed

Extraction from RA2_FGD_2P or RA2_IGD_2P products.

14.5.3.4 Product Structure

The overall product structure is described below.

Table 14.5.3.4-1 Level 2 Wind/Wave Product Structure

MPH
SPH
MDS

14.5.3.5 Main Product Header

The MPH is described in Volume 5.

14.5.3.6 Specific Product Header

The format of the specific product header is shown in the table below.

Table 14.5.2.7.4-1 RA-2 Level 2 Wind/Wave - SPH

N	Description	Units	Byte Length	Data Type	Dim.
1-70	**Fields 1-70 of Table 14.5.1.6-1. Field 1 set to RA2_MWR_FDMAR or RA2_MWR_IMAR.** (Note 1)	-	2618	-	-
	DSDs for included Data Sets				
71	**DSD (M) - for the MDS**	-	280	dsd	1
72	**DSD (M) - for the MWR MDS (see Note 3)**	-	280	dsd	1
73	**DSD (M) - for the 18 Hz Average Waveforms MDS (see Note 3)**	-	280	dsd	1
74	**DSD (M) - for the Burst Waveforms MDS (see Note 3)**	-	280	dsd	1
75	**DSD- Spare Reserved (each DSD-Spare is 279 blank space characters followed by one newline character)**	-	280	dsd_sp	1
76	**DSD- Spare Reserved (each DSD-Spare is 279 blank space characters followed by one newline character)**	-	280	dsd_sp	1
77	**DSD- Spare (each DSD-Spare is 279 blank space characters followed by one newline character)**	-	280	dsd_sp	1
	DSDs for referenced files				
78	**DSD (R) -Level 1B product from which the Level 2 product was created**	-	280	dsd	1
79	**DSD (R) -Level 2 product from which this product was extracted (see Note 2)**	-	280	dsd	1
80	**DSD (R) for Orbit Data File Used**	-	280	dsd	1

Table 14.5.2.7.4-1 RA-2 Level 2 Wind/Wave - SPH

N	Description	Units	Byte Length	Data Type	Dim.
81	**DSD (R) - For DORIS Ionospheric correction file** (See note 4)	-	280	dsd	1
82	**DSD (R) - RA2 Level 1B IF data file**	-	280	dsd	1
83	**DSD(R) - RA2 Level 1B USO data file**	-	280	dsd	1
84	**DSD (R) - MWR Level 1B side lobe data file**	-	280	dsd	1
85	**DSD- Spare (each DSD-Spare is 279 blank space characters followed by one newline character)**	-	280	dsd_sp	1
86	**DSD (R) - referencing the ENVISAT-1 Attitude data file**	-	280	dsd	1
87	**DSD- Spare (each DSD-Spare is 279 blank space characters followed by one newline character)**	-	280	dsd_sp	1
88	**DSD (R) - Platform data file**	-	280	dsd	1
89	**DSD (R) - for first ECMWF file used**	-	280	dsd	1
90	**DSD (R) - for second ECMWF file used**	-	280	dsd	1
91	**DSD (R) - for third ECMWF file used**	-	280	dsd	1
92	**DSD (R) - Solar Activity Data File**	-	280	dsd	1
93	**DSD (R) - Pole Location Data File**	-	280	dsd	1
94	**DSD- Spare (each DSD-Spare is 279 blank space characters followed by one newline character)**	-	280	dsd_sp	1
95	**DSD- Spare (each DSD-Spare is 279 blank space characters followed by one newline character)**	-	280	dsd_sp	1
96	**DSD- Spare (each DSD-Spare is 279 blank space characters followed by one newline character)**	-	280	dsd_sp	1
97	**DSD (R) - RA2 Level 1B Configuration File**	-	280	dsd	1
98	**DSD (R) - RA2 Level 1B Characterization Data File**	-	280	dsd	1
99	**DSD (R) - MWR Level 1B Configuration File**	-	280	dsd	1

Table 14.5.2.7.4-1 RA-2 Level 2 Wind/Wave - SPH

N	Description	Units	Byte Length	Data Type	Dim.
100	**DSD (R) - MWR Level 1B Characterization Data File**	-	280	dsd	1
101	**DSD (R) - MWR Land/Sea Flags Data File**	-	280	dsd	1
102	**DSD- Spare (each DSD-Spare is 279 blank space characters followed by one newline character)**	-	280	dsd_sp	1
103	**DSD- Spare (each DSD-Spare is 279 blank space characters followed by one newline character)**	-	280	dsd_sp	1
104	**DSD (R) - Altitude of Meteo Grid Points File**	-	280	dsd	1
105	**DSD (R) - RA2 Constants File**	-	280	dsd	1
106	**DSD (R) - RA2 Configuration (System) File for Ocean/Ice2 Processing**	-	280	dsd	1
107	**DSD (R) -RA2 Configuration (System) File for Ice1/Sea Ice Processing**	-	280	dsd	1
108	**DSD (R) - Sea State Bias file**	-	280	dsd	1
109	**DSD (R) - Modified Dip Map File**	-	280	dsd	1
110	**DSD (R) - Ionospheric Coefficients File**	-	280	dsd	1
111	**DSD (R) - Cartwright Amplitudes File**	-	280	dsd	1
112	**DSD (R) - Ocean Tide Solution 1 Map File (orthotide)**	-	280	dsd	1
113	**DSD (R) - Loading Tide Solution 1 Map File**	-	280	dsd	1
114	**DSD (R) - Ocean Tide Solution 2 Map File (harmonic)**	-	280	dsd	1
115	**DSD (R) - Loading Tide Solution 2 Map File**	-	280	dsd	1
116	**DSD (R) - Geoid Height Map File**	-	280	dsd	1
117	**DSD (R) - Mean Sea Surface Heights file**	-	280	dsd	1
118	**DSD (R) - Ocean depth/land elevation file**	-	280	dsd	1

Table 14.5.2.7.4-1 RA-2 Level 2 Wind/Wave - SPH

N	Description	Units	Byte Length	Data Type	Dim.
119	**DSD (R) - Slope model Map for Greenland**	-	280	dsd	1
120	**DSD (R) - Slope model Map for Antarctica**	-	280	dsd	1
121	**DSD- Spare (each DSD-Spare is 279 blank space characters followed by one newline character)**	-	280	dsd_sp	1
122	**DSD- Spare (each DSD-Spare is 279 blank space characters followed by one newline character)**	-	280	dsd_sp	1
	size (in bytes)		**17178**		

Note 1: The SPH descriptor value will be set to RA2_MWR_FDMAR if the meteocean product is coming from the FDGDR product and to RA2_MWR_IMAR if coming from the IGDR.

Note 2: Field 79 is always used in RA2_WWV_2P products: this DSD refers to the parent product RA2_FGD_2P or RA2_IGD_2P. The DS_NAME in this DSD corresponds to the SPH_DESCRIPTOR of the parent product from which this product was extracted.

Note 3: The DSDs of fields 72, 73, 74 are set always to 'NOT USED' for FDMAR and IMAR.

Note 4: The DSD for field 81 shall be set to 'NOT USED' for the NRT product (FDMAR).

The DS_NAME fields in the DSDs are filled as per Table 14.5.1.6-2, except for the following names used:

- field 71, DSD (M) for the MDS: RA2_OCEAN_DATA_FOR_LEVEL_2,
- field 79, DSD (R) : set to the SPH descriptor of the level-2 product from which this product was extracted.

14.5.3.7 Data Sets

The contents of the Data Sets are described in the following sections. Data Sets are in mixed binary format. They may contain ACSII strings, but the ASCII strings are not contained within quotation marks as for the MPH/SPH.

14.5.3.7.1 MDS

The MDS is composed of several MDSRs (1 MDSR every 1.114s). The MDSR format is described below.

Table 14.5.3.7.1-1 Meteo Product MDSR

N	Description	Units	Byte Length	Data Type	Dim.
1	**MDSR Time stamp** Time fields based on UTC are computed for each record and referred to the center of the averaged waveform.	-	12	mjd	1
2	**Quality Indicator (-1 for blank MDSR, 0 otherwise)**	-	1	sc	1
3	**Spare (Note 1 for differences between NRT and OFL products)**	-	3	uc	3
4	**Geodetic Latitude (positive North, negative South)**	$1x10^{-6}$ deg	4	sl	1
5	**Longitude (positive E, 0 at Greenwich, negative W)**	$1x10^{-6}$ deg	4	sl	1
6	**Source Packet Counter**	-	4	ul	1
7	**Instrument Mode ID**	flags	4	ul	1
8	**Measurement Confidence Data**	flags	4	ul	1
	Orbit Information				
9	**Altitude of CoG above reference ellipsoid**	mm	4	ul	1
10	**Instantaneous altitude rate**	mm/s	2	ss	1
11	**Spare (Note 1)**	-	6	uc	6
	Range Information				

Table 14.5.3.7.1-1 Meteo Product MDSR

N	Description	Units	Byte Length	Data Type	Dim.
12	**Ku-band ocean range**	mm	4	ul	1
13	**S-band ocean range**	mm	4	ul	1
14	**Standard deviation of 18 Hz Ku-band ocean range**	mm	2	us	1
15	**Standard deviation of 18 Hz S-band ocean range**	mm	2	us	1
16	**Number of 18 Hz valid points for Ku-band ocean range**	-	2	us	1
17	**Number of 18 Hz valid points for S-band ocean range**	-	2	us	1
18	**Spare (Note 1)**	-	8	uc	8
	Range Corrections Information				
19	**Model dry tropospheric correction**	mm	2	ss	1
20	**Inverted barometer correction**	mm	2	ss	1
21	**Model wet tropospheric correction**	mm	2	ss	1
22	**MWR derived wet tropospheric correction**	mm	2	ss	1
23	**RA2 ionospheric correction on Ku-band**	mm	2	ss	1
24	**RA2 ionospheric correction on S-band**	mm	2	ss	1
25	**Ionospheric correction from DORIS on Ku-band**	mm	2	ss	1
26	**Ionospheric correction from DORIS on S-band**	mm	2	ss	1
27	**Ionospheric correction from model on Ku-band**	mm	2	ss	1
28	**Ionospheric correction from model on S-band**	mm	2	ss	1
29	**Sea state bias correction on Ku-band**	mm	2	ss	1
30	**Sea state bias correction on S-band**	mm	2	ss	1
31	**Spare (Note 1)**	-	12	uc	12

Table 14.5.3.7.1-1 Meteo Product MDSR

N	Description	Units	Byte Length	Data Type	Dim.
	Significant Wave Height Information				
32	**Square of Ku-band Significant wave height**	mm^2	4	sl	1
33	**Square of S-band Significant wave height**	mm^2	4	sl	1
34	**Ku-band Significant wave height**	mm	2	ss	1
35	**S-band Significant wave height**	mm	2	ss	1
36	**Standard deviation of 18 Hz Ku-band SWH**	mm	2	ss	1
37	**Standard deviation of 18 Hz S-band SWH**	mm	2	ss	1
38	**Number of 18 Hz valid points for Ku-band ocean SWH**	-	2	us	1
39	**Number of 18 Hz valid points for S-band ocean SWH**	-	2	us	1
	Backscatter Information				
40	**Ku-band corrected Ocean backscatter coefficient**	dB/100	2	ss	1
41	**S-band corrected Ocean backscatter coefficient**	dB/100	2	ss	1
42	**Standard deviation of 18 Hz Ku-band ocean backscatter coefficient**	dB/100	2	ss	1
43	**Standard deviation of 18 Hz S-band ocean backscatter coefficient**	dB/100	2	ss	1
44	**Number of 18 Hz valid points for Ku-band ocean backscatter coefficient**	-	2	us	1
45	**Number of 18 Hz valid points for S-band ocean backscatter coefficient**	-	2	us	1
46	**Spare (Note 1)**	-	40	uc	40
	Backscatter Corrections Information				
47	**Ku-band net instrumental correction for AGC**	dB/100	2	ss	1

Table 14.5.3.7.1-1 Meteo Product MDSR

N	Description	Units	Byte Length	Data Type	Dim.
48	**S-band net instrumental correction for AGC**	dB/100	2	ss	1
49	**Ku-band atmospheric attenuation correction**	dB/100	2	ss	1
50	**S-band atmospheric attenuation correction**	dB/100	2	ss	1
51	**Ku-band rain attenuation**	dB/100	4	sl	1
	Off-nadir Angle Information				
52	**Square of the satellite off nadir angle from platform data**	$deg^2/10^4$	2	ss	1
53	**Square of the satellite off nadir angle from waveform data**	$deg^2/10^4$	2	ss	1
	Geophysical Information				
54	**Mean sea-surface height**	mm	4	sl	1
55	**Geoid height**	mm	4	sl	1
56	**Ocean depth/land elevation**	mm	4	sl	1
57	**Total geocentric ocean tide height (solution 1)**	mm	2	ss	1
58	**Total geocentric ocean tide height (solution 2)**	mm	2	ss	1
59	**Long period Tide height**	mm	2	ss	1
60	**Tidal loading height (Solution 2)**	mm	2	ss	1
61	**Solid earth tide height**	mm	2	ss	1
62	**Geocentric pole tide height**	mm	2	ss	1
63	**Model surface atmospheric pressure**	10 Pa	2	ss	1
64	**MWR water vapour content**	10^{-2} g/cm^2	2	ss	1
65	**MWR liquid water content**	10^{-2} kg/m^2	2	ss	1

Table 14.5.3.7.1-1 Meteo Product MDSR

N	Description	Units	Byte Length	Data Type	Dim.
66	**RA2 Total electron content**	10^{-1} TECU	2	ss	1
67	**RA2 wind speed**	mm/s	2	ss	1
68	**u component of the model wind vector**	mm/s	2	ss	1
69	**v component of the model wind vector**	mm/s	2	ss	1
70	**Tidal loading height (Solution 1)**	mm	2	ss	1
71	**Spare (Note 1)**	-	8	uc	8
	MWR Information				
72	**Interpolated 23.8 GHz brightness temperature from MWR**	K/100	2	ss	1
73	**Interpolated 36.5 GHz brightness temperature from MWR**	K/100	2	ss	1
74	**Interpolated standard deviation of MWR 23.8 GHz brightness temperature**	K/100	2	ss	1
75	**Interpolated standard deviation of MWR 36.5 GHz brightness temperature**	K/100	2	ss	1
76	**Spare (Note 1)**	-	2	uc	2
	Flags and Other Quality Information				
77	**Average Ku chirp band**	-	2	us	1
78	**Ku chirp band id [40 bits]** First 40 least significant bits (bits 0-39) correspond to the 20 values (2 bits per data block) - bits 0 and 1 apply to the first data block, Unused bits set to 0	flags	8	ul	2

Table 14.5.3.7.1-1 Meteo Product MDSR

N	Description	Units	Byte Length	Data Type	Dim.
79	**Error flag for chirp band id [20 bits]** First 20 least significant bits (bits 0-19) correspond to the 20 values (1 per data block), bit 0 applies to the first data block. A bit is set to 0 for a valid measurement, 1 for an invalid measurement. Unused bits set to 0.	flags	4	ul	1
80	**Instrument flag**	flags	4	ul	1
81	**Fault identifier [20 bits]** First 20 least significant bits (bits 0-19) correspond to the 20 values (1 per data block), bit 0 applies to the first data block. A bit is set to 0 for a valid measurement, 1 for an invalid measurement. Unused bits set to 0.	flags	8	ul	2
82	**Spare (Note 1)**	-	8	uc	8
83	**Waveforms samples fault identifier [40 bits]** First 40 least significant bits (bits 0-39) correspond to the 20 values (2 bits per data block) - bits 0 and 1 apply to the first data block, Unused bits set to 0	flags	8	ul	2
84	**Instrument mode ID at data block level [80 bits]** First 80 least significant bits (bits 0-79) correspond to the 20 values (4 bits per data block), bits 0 to 3 apply to the first data block. Unused bits set to 0.	flags	12	ul	3
85	**No. of measures for Ku flight calibration factor evaluation**	-	2	us	1
86	**No. of measures for S flight calibration factor evaluation**	-	2	us	1
87	**MWR instrument flag (as defined in Table 14.4.1.7.4-3)**	flags	2	us	1
88	**Spare (Note 1)**	-	6	uc	1
89	**1Hz Ku-Band Peakiness**	10^{-3}	2	us	2
90	**1Hz S-Band Peakiness**	10^{-3}	2	us	2

Table 14.5.3.7.1-1 Meteo Product MDSR

N	Description	Units	Byte Length	Data Type	Dim.
91	**Spare (Note 1)**	-	12	uc	1
92	**Ku-band ocean retracking quality [20 bits]** First 20 least significant bits (bits 0-19) correspond to the 20 values (one per data block) containing: 0= valid measurement, 1= invalid. Bit 0 applies to the first data block. Unused bits set to 0.	flags	4	ul	1
93	**S-band ocean retracking quality [20 bits]** First 20 least significant bits (bits 0-19) correspond to the 20 values (one per data block) containing: 0= valid measurement, 1= invalid. Bit 0 applies to the first data block. Unused bits set to 0.	flags	4	ul	1
94	**Altimeter surface type flag**	flag	2	us	1
95	**Radiometer land/ocean flag**	flag	2	us	1
96	**MWR Quality interpolation flag**	flag	2	us	1
97	**Altimeter Rain flag**	flag	2	us	1
98	**Interpolation Flag**	flag	2	us	1
99	**Spare (Note 1)**	-	2	uc	1
	size (in bytes)		**356**		

Note 1: The spare fields will always be set to zero, according to Annex A (Paragraph A.2.3) of Products Specifications.
FIELD 3: On level2 products produced with the OFL CMA processor this field will contain the software version of the RA2 IPF used to process the input level1 and is defined as “Level 1B software number” of three bytes. As an example, if the IPF version used is 4.58, the "Level 1B software number" value will be set to 458.

14.5.3.8 Estimated Size

The estimated size of the Wind/Wave product is calculated as follows for one full orbit:

MPH: 1247 bytes

SPH: 17178 bytes

MDS: 356 bytes/MDSR * 5422 MDSRs = 1.930 MBytes

TOTAL: approx. 2 MBytes

These values are based on 6040 seconds per full orbit, and one Meteo Product MDSR per 55.7 ms * 20 = 1.114 seconds.

PAGE INTENTIONALLY LEFT BLANK

14.6 AUXILIARY DATA FILES

The following sections define the Auxiliary Data files used by the RA-2/MWR products processor.

Note that the values of SPH_DESCRIPTOR and DS_NAME strings within the RA2/MWR auxiliary products are not included in this document. They are to be found in the corresponding Level 1b Algorithms specification documents (TNO/ RAS/0018/ALS iss.10 and TNO/RAS/0010/ALS iss.11) or Level 2 IODD (PO-ST-RA-0005-CLS iss.5.4).

Note that all the spare fields inside the auxiliary files binary datasets will always be set to zero, according to Annex A (Paragraph A.2.3) of Products Specifications.

14.6.1 RA2 Level 1B Processor Configuration File

This file contains information used to configure the processor, such as thresholds for

PCD evaluation or other reference information.
FILE ID: RA2_CON_AX
TYPE: Auxiliary
USE: Level 1B RA-2 processing
UPDATED: Infrequently
SIZE: MPH(1247 bytes) + SPH(378 bytes) + GADS(176 bytes) = 1801 bytes

14.6.1.1 Format

The file structure is shown in the table below:

MPH
Auxiliary Data SPH (as described in Volume 16) with 1 DSD *DSD(G) pointing to the GADS*
GADS

The contents of the GADS are detailed in the following table.

Table 14.5.3.7.1-1 RA-2 Processor Configuration File GADS Format

N	Description	Units	Byte Size	Data Type	Dim.
1	**Configuration file creation time**	MJD	12	mjd	1
2	**Length of DSR in bytes**	bytes	4	ul	1
3	**spare**	-	4	uc	4
4	**Flag for selection of specific IF filter mask correction processing** 0: no corrections 1: use always Flight Calib 2: use /flight Calib if valid 3: use always ground Calib	-	1	uc	1
5	**Flag for selection of specific USO calibration value** 1: use always Flight Calib 2: use Flight Calib if valid 3: use always ground Calib	-	1	uc	1
6	**Two values in micro-seconds representing the reference values for computed Rx delay test**	microseconds	8	sl	2
7	**Two values representing the reference values for the AGC test**	10^{-2} dB	8	sl	2
8	**Zero padding factor used for PTR evaluation. It must be an integer power of 2.**	-	4	sl	1
9	**Two values representing the reference values for PTR shift test**	10^{-2} FFT filter units	8	sl	2
10	**Two values representing the reference values for PTR power test**	10^{-2} dB	8	sl	2
11	**Positive integer representing the maximum number of measures derived from single PTR measurements to be averaged to get Flight Calibration Correction Parameters for the Ku band.**	-	4	ul	1

Table 14.5.3.7.1-1 RA-2 Processor Configuration File GADS Format

N	Description	Units	Byte Size	Data Type	Dim.
12	**Positive integer representing the maximum number of measures derived from single PTR measurements to be averaged to get Flight Calibration Correction Parameters for the S band.**	-	4	ul	1
13	**Positive integer representing the minimum number of calibration data from single Ku PTR measurements required for evaluation of smoothed flight calibration parameters.**	-	2	us	1
14	**Positive integer representing the minimum number of calibration data from single S PTR measurements required for evaluation of smoothed flight calibration parameters.**	-	2	us	1
15	**Positive integer defining the maximum time lag in SP multiples between two Ku PTR measurements.**	-	4	ul	1
16	**Positive integer defining the maximum time lag in SP multiples between two S PTR measurements.**	-	4	ul	1
17	**Positive number in multiples of 10^{-2} defining the scaling multiplicative factor for NPM measurement**	10^{-2}	4	ul	1
18	**Default reference value for redundancy flag of HPA subsystem required to manage event of unknown decoded value in "Red_vec_HPA" flag.** 0: chain A 3: chain B	-	1	uc	1
19	**Default reference value for redundancy flag of RFSS subsystem required to manage event of unknown decoded value in "Red_vec_RFSS" flag.** 0: chain A 3: chain B	-	1	uc	1
20	**Number of OBDH clocks between two consecutive source packets**	-	4	ul	1
21	**Tolerance of the number of OBDH clocks between two consecutive source packets**	-	4	sl	1

Table 14.5.3.7.1-1 RA-2 Processor Configuration File GADS Format

N	Description	Units	Byte Size	Data Type	Dim.
22	**Number of USO counter clocks between two consecutive source packets**	-	4	ul	1
23	**Tolerance on number of USO counter clocks between two consecutive source packets**	-	4	sl	1
24	**Offset in multiples of 10-2 for Data Blocks Datation Calculation**	10-2	4	sl	1
25	**Offset in multiples of 10-2 for waveform delay rate compensation**	10-2	4	sl	1
26	**Time lag in seconds to compare Level 0 product UTC datation and IF Mask Flight Calibration Datation for IF mask selection**	s	4	ul	1
27	**Time lag in seconds to compare Level 0 product UTC datation and USO Calibration Datation for IF mask selection**	s	4	ul	1
28	**Two non-negative values in multiples of 10-4 representing the reference values for IF mask quality check**	10^{-4}	8	sl	2
29	**Minimum number of IF Noise spectra to be averaged**	-	4	sl	1
30	**Number of noise samples skipped at edges of FFT filter bank in IF Mask retrieval processing**	-	2	us	1
31	**Number of packets skipped at the beginning of Level 0 Product for IF Mask retrieval processing**	-	2	us	1
32	**Two non negative values representing the reference values for Tx/Rx clock quality check.**	ps	8	sl	2
33	**ISP number in the first Level 0 Product selected for the USO Calibration processing**	-	4	ul	1
34	**ISP number in the second Level 0 product selected for the USO calibration processing**	-	4	ul	1

Table 14.5.3.7.1-1 RA-2 Processor Configuration File GADS Format

N	Description	Units	Byte Size	Data Type	Dim.
35	**Minimum time lag between USO datation measurements needed for USO calibration processing**	s	4	ul	1
36	**Threshold for Level 1B SPH field RA2_PROC_THRESH**	10^{-2}%	2	us	1
37	**Threshold for Level 1B SPH field RA2_HEADER_THRESH**	10^{-2}%	2	us	1
38	**Buffer Length for S-Band anomaly flag**	-	2	us	1
39	**Counter for S-Band anomaly flag**	-	2	us	1
40[12]	**step**	SP	2	us	1
41	**Smooth_fact**	10^{-7} ps	2	us	1
42	**USO_correction_switch**		1	uc	1
43[13]	**Threshold for the evaluation of the sample value wraparound, in the anomalous S-band waveform reconstruction algorithm.**	FFT power units	2	ss	1
44	**spares**	-	9	uc	9
TOTAL			**176**		

[12] **three new parameters have been added due to the new USO algorithm: the time interval used to calculate each sample of the un-smoothed clock period (step), the smoothing factor used to perform the smoothing and obtain the final clock period data stream (smooth_factor), and a variable that will indicate weather the USO correction algorithm shall be run within the Level 1b, or on the contrary, the USO Clock period shall be taken from the auxiliary file (USO_correction_switch).**

[13] **the field number is not correlative to the one shown in the Configuration file of the Level 1b reference processor DPM, because 3 fields have been added for the USO correction algorithm.**

14.6.2 USO Frequency Measured on Ground

This file is used to provide an accurate estimate of the USO frequency to the IPF.

FILE ID: RA2_USO_AX

TYPE: Auxiliary

USE: Level 1B RA-2 processing

UPDATED: TBD

SIZE: MPH(1247 bytes) + SPH(378 bytes) + GADS (42 bytes) =1667 bytes

14.6.2.1 Format

The file structure is shown in the table below:

MPH
Auxiliary Data SPH (as described in Volume 16) with 1 DSD *DSD(G) pointing to the GADS*
GADS

The contents of the GADS are detailed in the following table.

Table 14.5.3.7.1-1 RA-2 USO Frequency File GADS Format

N	Description	Units	Byte Size	Data Type	Dim.
1	**USO file creation time**	MJD	12	mjd	1
2	**Length of DSR in bytes**	bytes	4	ul	1
3	**spare**	-	4	uc	4
4	**USO data reference time**	MJD	12	mjd	1
5	**Tx/Rx clock Period**	[10^{-6}ps]	8	ud	1
6	**USO identification flag** 1: no USO cal 0: chain A 3: chain B	-	1	uc	1
7	**Quality Flag** 0: computed value in range 1: computed value out of allowed range 2: too short time lag 3: combination of error events 1 and 2	-	1	uc	1
TOTAL			**42**		

14.6.3 RA2 Instrument Characterization Data

This file provides data which describes the basic characteristics of the instrument.

FILE ID: RA2_CHD_AX

TYPE: Auxiliary

USE: Level 1B and Level 2 RA-2 processing

UPDATED: infrequently

SIZE: MPH(1247 bytes) + SPH(378 bytes) + GADS (2520) = 4145 bytes

14.6.3.1 Format

The file structure is shown in the table below:

MPH
Auxiliary Data SPH (as described in Volume 16) with 1 DSD *DSD pointing to the GADS*
GADS

The contents of the GADS are detailed in the following table.

Table 14.5.3.7.1-1 RA-2 Instrument Characterization File GADS Format

N	Description	Units	Byte Size	Data Type	Dim.
1	**Characterisation file creation time (MJD)**	-	12	mjd	1
2	**Length of DSR in bytes**	bytes	4	ul	1
3	**spare**	-	4	uc	4
4	**Ku antenna gain**	[10-2dB]	4	sl	1
5	**S antenna gain**	[10-2dB]	4	sl	1
6	**Ku band antenna beamwidth (-3dB value)**	[10-6 deg]	4	sl	1
7	**S band antenna beamwidth (-3dB value)**	[10-6 deg]	4	sl	1
8	**Effective Tx-Rx Gain for Ku channel.** 4 values defined, according to HPA and RF subsystems crosstrapping: Tx-A/RFSS-A, Tx-A/RFSS-B, Tx-B/RFSS-B, Tx-B/RFSS-A.	[10-2dB]	16	sl	4

Table 14.5.3.7.1-1 RA-2 Instrument Characterization File GADS Format

N	Description	Units	Byte Size	Data Type	Dim.
9	**Effective Tx-Rx Gain for S channel.** 2 values defined, one for RFSS-A and one for RFSS-B chains, according to RF subsystem crosstrapping.	[10-2dB]	8	sl	2
10	**Ku band PTR Reference Power value at Microwave Receiver Output.** Four values are defined according to HPA and RF subsystems crosstrapping: Tx-A/RFSS-A, Tx-A/RFSS-B, Tx-B/RFSS-B, Tx-B/RFSS-A	[10-2dBw]	16	sl	4
11	**S band PTR Reference Power value at Microwave Receiver Output.** Two values are defined, one for RFSS-A and one for RFSSB, according to RF subsystem crosstrapping.	[10-2dBw]	8	sl	2
12	**Reference AGC used for PTR Reference Power value measurement at Ku band.** Two values are defined, one for RFSS-A and one for RFSSB, according to RF subsystem crosstrapping.	[10-2dB]	8	sl	2
13	**Reference AGC used for PTR Reference Power value measurement at S band.** Two values are defined, one for RFSS-A and one for RFSSB, according to RF subsystem crosstrapping.	[10-2dB]	8	sl	2
14	**Default Ku band time delay calibration factor in picoseconds derived from PTR measurement.** 4 values are defined according to HPA and RF sub-systems crosstrapping: Tx-A/RFSS-A, Tx-A/RFSS-B, Tx-B/RFSS-B, Tx-B/RFSS-A	[ps]	16	sl	4
15	**Default S band time delay calibration factor in picoseconds derived from PTR measurement.** 2values are defined according to RF sub-systems crosstrapping: RFSS-A, RFSS-B	[ps]	8	sl	2
16	**Default Ku band amplitude calibration factor derived from on ground PTR measurement.** 4 values are defined according to HPA and RF sub-systems crosstrapping: Tx-A/RFSS-A, Tx-A/RFSS-B, Tx-B/RFSSB, Tx-B/RFSS-A	[10-2dB]	16	sl	4
17	**Default S band amplitude calibration factor derived from on ground PTR measurement.** 2values are defined according to RF sub-systems crosstrapping: RFSS-A,	[10-2dB]	8	sl	2

Table 14.5.3.7.1-1 RA-2 Instrument Characterization File GADS Format

N	Description	Units	Byte Size	Data Type	Dim.
	RFSS-B				
18	**AGC characterization table for AGC signal conversion.** Each table in characterized by two entries (one for each RF attenuator) in the range 0-31 dB with 1 dB step resolution. Two Tables are defined, one for RFSS-A and one for RFSSB, according to RF subsystem crosstrapping.	[10-2dB]	512	sl	128
19	**Correction table for AGC fine conversion** Defined as 301 entries in the range 0..3 dB with 0.01 dB step resolution. A unique conversion table is defined for both SPSA-A and SPSA-B units. Non linearities of on board AGC loop can be compensated through this table.	[10-2dB]	1204	sl	301
20	**AGC characterization table for NPM calibration.** The table is characterised by 63 values. Two Tables are defined, one for RFSS-A and one for RFSS-B, according to RF subsystem crosstrapping.	[10-2dB]	504	sl	126
21	**Differential Delay calibration factor for the time delay measurement of the Ku channel defined during ground test activity.** It includes FEE Tx/Rx vs. calibration paths differential delay, equiphase antenna plane - antenna flange path, antenna flange - panel flange path. Two values (non negative reals) are defined, one for RFSS-A and one for RFSS-B, according to RF subsystem crosstrapping.	[ps]	8	sl	2
22	**Differential Delay calibration factor for the time delay measurement of the S channel defined during ground test activity.** It includes FEE Tx/Rx vs. calibration paths differential delay, equiphase antenna plane - antenna flange path, antenna flange - panel flange path. Two values (non negative reals) are defined, one for RFSS-A and one for RFSS-B, according to RF subsystem crosstrapping.	[ps]	8	sl	2

Table 14.5.3.7.1-1 RA-2 Instrument Characterization File GADS Format

N	Description	Units	Byte Size	Data Type	Dim.
23	**Loss Calibration factor for the Ku channel defined during ground test activity.** Four real values are defined according to HPA RF subsystems crosstrapping: HPA-A/RFSS-A, HPA-A/RFSS-B, HPA-B/RFSS-B, HPA-B/RFSS-A	[10-2dB]	16	sl	4
24	**Loss Calibration factor for the S channel defined during ground test activity.** Two real values are defined, one for RFSS-A and one for RFSS-B, according to RF subsystem crosstrapping.	[10-2dB]	8	sl	2
25	**Nominal Tx pulse length (20 microsec).**	[ps]	4	sl	1
26	**first Ku nominal chirp bandwidth (20 Mhz).**	[kHz]	4	sl	1
27	**second Ku nominal chirp bandwidth (80 Mhz).**	[kHz]	4	sl	1
28	**third Ku nominal chirp bandwidth (320 Mhz).**	[kHz]	4	sl	1
29	**S nominal chirp bandwidth (160 Mhz).**	[kHz]	4	sl	1
30	**Chirp Slope of first Ku chirp.** Two values are defined, one for RFSS-A and one for RFSSB, according to RF subsystem crosstrapping. Remark: the effective chirp slope value, including the actual sign of the slope, shall be introduced in this field.	[kHz/ microsecond]	8	sl	2
31	**Chirp Slope of second Ku chirp.** Two values are defined, one for RFSS-A and one for RFSSB, according to RF subsystem crosstrapping. Remark: the effective chirp slope value, including the actual sign of the slope, shall be introduced in this field	[kHz/ microsecond]	8	sl	2
32	**Chirp Slope of third Ku chirp.** Two values are defined, one for RFSS-A and one for RFSSB, according to RF subsystem crosstrapping. Remark: the effective chirp slope value, including the actual sign of the slope, shall be introduced in this field	[kHz/ microsecond]	8	sl	2

Table 14.5.3.7.1-1 RA-2 Instrument Characterization File GADS Format

N	Description	Units	Byte Size	Data Type	Dim.
33	**Chirp Slope of S chirp.** Two values are defined, one for RFSS-A and one for RFSSB, according to RF subsystem crosstrapping. Remark: the effective chirp slope value, including the actual sign of the slope, shall be introduced in this field.	[kHz/ microsecond]	8	sl	2
34	**Spares**	-	4	uc	4
35	**Tx/Rx Clock period derived from USO frequency calibration.** Two values (non negative reals) are defined, one for RFSSA and one for RFSS-B, according to RF subsystem crosstrapping.	[10^{-6}ps]	16	ud	2
36	**Ku Pulse Repetition Interval** defined as a positive integer in multiples of fundamental Tx/ Rx clock periods (nominal value: 44560)	none	4	ul	1
37	**Ambiguity Order for Ku band: 9** (positive integer)	none	4	ul	1
38	**Ku radar wavelength.** Two values are defined, one for RFSS-A and one for RFSSB, according to RF subsystem crosstrapping.	[10^{-6}m]	8	sl	2
39	**S radar wavelength.** Two values are defined, one for RFSS-A and one for RFSSB, according to RF subsystem crosstrapping.	[10^{-6}m]	8	sl	2
40	**Factor for PTR width computation**	10^{-8}	4	ul	1
41	**spares**	-	12	uc	12
TOTAL			**2520**		

14.6.4 RA2 IF Mask Data File

The IF Mask data file is used to correct the amplitude of the waveform samples for the instrument IF filter shape.The IF mask may be derived on-ground or in-flight. Also, the on-ground data may differ for chain A and chain B. Thus, three files have been defined. All three files share a common format.

FILE ID: RA2_IFF_AX -- IF Mask from in-flight data

RA2_IFA_AX -- IF Mask from on-ground data for chain A RA2_IFB_AX -- IF Mask from on-ground data for chain B

TYPE: Auxiliary

USE: Level 1B processing

UPDATED: IFA and IFB-- infrequently, IFF -- periodically, when satellite commanded into IF Calibration mode. This occurs with TBD frequency.

SIZE: MPH(1247 bytes) + SPH(378 bytes) + GADS (556) = 2181 bytes

14.6.4.1 Format

The file structure is shown in the table below:

MPH
Auxiliary Data SPH (as described in Volume 16) with 1 DSD *DSD pointing to the GADS*
GADS

The contents of the GADS are detailed in the following table.

Table 14.5.3.7.1-1 RA-2 IF Mask File GADS Format

N	Description	Units	Byte Size	Data Type	Dim.
1	**IF mask file creation time**	-	12	mjd	1
2	**Length of DSR in bytes**	bytes	4	ul	1
3	**spare**	-	4	uc	4
4	**IF mask reference time**	MJD	12	mjd	1
5	**OBDH datation word (43 bits)**	[1/524288 s]	8	ud	1
6	**128 IF Correction Mask samples**	10^{-6}	512	ul	128
7	**RFSS Redundancy Flag** 0: chain A 3: chain B	-	1	uc	1
8	**Quality Flag** 0: no errors 1: noise spectra equal to zero 2: error in inversion 3: computed IF mask samples out of range 4: averaging less than the minimum 5: error in packet length 6: Tx bit errors 7: RF subsystem chain is not defined	-	1	uc	1
9	**Number of averaged spectra**	-	2	us	1
TOTAL			**556**		

14.6.5 Ionospheric Coefficients File

This file contains the values of the polynomial coefficients to be used in the computation of the ionospheric correction from the Bent model. These coefficients cover a year.

FILE ID: RA2_IOC_AX

TYPE: Auxiliary

USE: Level 2 RA-2 processing

UPDATED: Once per year (nominally never updated)

SIZE: MPH(1247 bytes) + SPH(378 bytes) + DSs (184608 bytes) = 186233 bytes

14.6.5.1 Format

The file structure is shown in the table below:

MPH
Auxiliary Data SPH (as described in Volume 16) with 1 DSD *DSD pointing to the GADS*
Coefficients GADS

14.6.5.1.1 Coefficients GADS

The GADS consists of several GADS records (GADSR). Each GADSR contains a set of coefficients corresponding to one month (January to December) where the first set of coefficients is recorded followed by the second set of coefficients. The first set of coefficients (WF) is related to the f0F2 (critical frequency) parameters and is composed

of 13x76x3 (j,k,l) coefficients for each month. The second set of coefficients (WM) is related to the M(3000)F2 (ratio of the maximum usable frequency to the critical frequency) parameters and is composed of 9x49x2 (j,k,l) coefficients for each month.

Table 14.6.5.1.1-1 RA2_IOC_AX Grid Data GADSR Format

N	Description	Units	Byte Size	Data Type	Dim.
1	**Coefficient values** Values are ordered as follows: polynomial coefficients WFi,1,1,1 WFi,1,1,2 WFi,1,1,3 WFi,1,2,1 .... WFi,13,76,3 WMi,1,1,1 WMi,1,1,2 WMi,1,2,1 .... WMi,9,49,2	-	15384	fl	3846
TOTAL			**15384**		

14.6.6 Mean Sea Surface

This file contains the values of the mean sea surface heights of the CLS01 model. The values are recorded on a regular grid. The coverage of the grid is from 1 to 21599 minutes in longitude and from -4799 to 4921 minutes in latitude. The resolution of the grid is 2 minutes in longitude and 2 minutes in latitude.One value is recorded at each gridpoint.

FILE ID: RA2_MSS_AX

TYPE: Auxiliary

USE: Level 2 RA-2 processing

UPDATED: Once per year

SIZE: MPH(1247 bytes) + SPH(658 bytes) + DSs(approx. 200 MBytes)

14.6.6.1 Format

The file structure is shown in the table below:

MPH
Auxiliary Data SPH (as described in Volume 16) with 2 DSD *DSD pointing to the General GADS DSD pointing to the Grid Data GADS*
General GADS
Grid Data GADS

14.6.6.1.1 General GADS

The GADS contains information describing the whole file. The format of the GADS is shown below.

Table 14.6.6.1.1-1 RA2_MSS_AX General GADS Format

N	Description	Units	Byte Length	Data Type	Dim.
1	**LAT_GRID_SIZE=**	keyword	14	uc	14
	Resolution of the grid in latitude (dφ)	degrees	15	Afl	1
	<deg> or <min>	units	5	uc	5
	newline character	terminator	1	uc	1
2	**LAT_FIRST=**	keyword	10	uc	10
	Latitude of first point on the grid (φf)	degrees	15	Afl	1
	<deg> or <min>	units	5	uc	5
	newline character	terminator	1	uc	1
3	**LAT_LAST=**	keyword	9	uc	9
	Latitude of last point on the grid (φl)	degrees	15	Afl	1

Table 14.6.6.1.1-1 RA2_MSS_AX General GADS Format

N	Description	Units	Byte Length	Data Type	Dim.
	<deg> or <min>	units	5	uc	5
	newline character	terminator	1	uc	1
4	**LON_GRID_SIZE=**	keyword	14	uc	14
	Resolution of the grid in longitude (d)	degrees	15	Afl	1
	<deg> or <min>	units	5	uc	5
	newline character	terminator	1	uc	1
5	**LON_FIRST=**	keyword	10	uc	10
	Longitude of first point on the grid (f)	degrees	15	Afl	1
	<deg> or <min>	units	5	uc	5
	newline character	terminator	1	uc	1
6	**LON_LAST=**	keyword	9	uc	9
	Longitude of last point on the grid (l)	degrees	15	Afl	1
	<deg> or <min>	units	5	uc	5
	newline character	terminator	1	uc	1
7	**DEF=**	keyword	4	uc	4
	Default value of the grid values(def)	-	11	Al	1
	newline character	terminator	1	uc	1
8	**Spare (blank characters)**	-	50	uc	50
	newline character	terminator	1	uc	1
TOTAL			**259**		

14.6.6.1.2 Grid Data GADS

This GADS contains several GADSRs, which provides the mean sea surface data in grid format. Each record corresponds to a longitude value.The first record corresponds to the first value of the longitude, and the last record is relative to the last value of the longitude. The format of each GADSR is given below.

Table 14.6.6.1.2-1 RA2_MSS_AX Grid Data GADSR Format

N	Description	Units	Byte Size	Data Type	Dim.
1	**MSS Heights (from first latitude to last latitude)** Ordered as follows: MSS height at first latitude point MSS height at second latitude point .... MSS height at last latitude point.	mm	19444	sl	4861
TOTAL			**19444**		

14.6.7 Solar Activity Data File

This file contains the 12 month running average of the sunspot number.

FILE ID: RA2_SOL_AX

TYPE: Auxiliary

USE: Level 2 RA-2 processing

UPDATED: Once per month

SIZE: MPH(1247 bytes) + SPH(378 bytes) + GADS (960 bytes)= 2585 bytes

14.6.7.1 Format

The file structure is shown in the table below:

MPH
Auxiliary Data SPH (as described in Volume 16) with 1 DSD *DSD pointing to the GADS*
GADS

14.6.7.1.1 GADS

The GADS contains 120 GADSRs. Each record corresponds to one month, and thus the file covers a period of 10 years. The format of the GADSR is shown below.

Table 14.6.7.1.1-1 RA2_SOL_AX GADSR Format

N	Description	Units	Byte Size	Data Type	Dim.
1	**Year**	year	2	us	1
2	**Month**	month	2	us	1
3	**Value of solar activity index**	-	2	us	1
4	**spare**	-	2	us	1
TOTAL			**8**		

14.6.8 Pole Location Data File

This file contains the x and y positions of the pole relative to a mean position. This file is used to compute the geocentric pole tide height.

FILE ID: RA2_POL_AX

TYPE: Auxiliary

USE: Level 2 RA-2 processing

UPDATED: A few times per week (the file coverage is 10 years, but the values are updated when re-estimated 2 to 3 times per week)

SIZE: MPH(1247 bytes) + SPH(378 bytes) + GADS (73 kBytes)= 74.16 kBytes

14.6.8.1 Format

The file structure is shown in the table below:

MPH
Auxiliary Data SPH (as described in Volume 16) with 1 DSD *DSD pointing to the GADS*
GADS

14.6.8.1.1 GADS

The GADS contains 3650 GADSRs. Each record corresponds to one day, and thus the file covers a period of 10 years. The format of the GADSR is shown below.

Table 14.6.8.1.1-1 RA2_POL_AX GADSR Format

N	Description	Units	Byte Size	Data Type	Dim.
1	**time stamp**	mjd	12	mjd	1
2	**x-position of the pole relative to a mean position**	arcsec	4	fl	1
3	**y-position of the pole relative to a mean position**	arcsec	4	fl	1
TOTAL			**20**		

14.6.9 Platform Data File

This file contains the distance between the antenna phase center and the center of gravity of the satellite (nadir projection). It is used to compute the correction to reference the altimeter range measurement to the center of gravity.

FILE ID: RA2_PLA_AX

TYPE: Auxiliary

USE: Level 2 RA-2 processing

UPDATED: TBD SIZE: MPH(1247 bytes) + SPH(378 bytes) + GADS (TBD)= TBD

14.6.9.1 Format

The file structure is shown in the table below:

MPH

Auxiliary Data SPH (as described in Volume 16) with 1 DSD *DSD pointing to the GADS*
GADS

14.6.9.1.1 GADS

The GADS contains TBD GADSRs. The format of the GADSR is shown below.

Table 14.6.9.1.1-1 RA2_PLA_AX GADSR Format

N	Description	Units	Byte Size	Data Type	Dim.
1	**time stamp**	mjd	12	mjd	1
2	**centre of mass correction (distance between antenna phase centre and the centre of gravity of the satellite)**	m	4	fl	1
TOTAL			**16**		

14.6.10 Ocean / Ice2 Configuration (System) File

This file contains the processing parameters used for the ocean/ice2 processing.

FILE ID: RA2_SOI_AX

TYPE: Auxiliary

USE: Level 2 RA-2 processing

UPDATED: Infrequently

SIZE: MPH(1247 bytes) + SPH(3178 bytes) + DSs(16008 bytes) = 20433

bytes

14.6.10.1 Format

The file structure is shown in the table below:

MPH
Auxiliary Data SPH (as described in Volume 16) with 11 DSD *DSD pointing to the Node A11 GADS* *DSD pointing to the Node A12 GADS* *DSD pointing to the Node A21 GADS* *DSD pointing to the Node A22 GADS* *DSD pointing to the Node A24 GADS* *DSD pointing to the Node A31 GADS* *DSD pointing to the Node A32 GADS* *DSD pointing to the Node A33 GADS* *DSD pointing to the Node A34 GADS* *DSD pointing to the Node A35 GADS* *DSD pointing to the Node A41 GADS*
Node A11 GADS
Node A12 GADS
Node A21 GADS
Node A22 GADS
Node A24 GADS
Node A31 GADS
Node A32 GADS
Node A33 GADS
Node A34 GADS
Node A35 GADS

Node A41 GADS

14.6.10.1.1 Node A11 GADS

The format of the GADS is shown below.

Table 14.6.10.1.1-1 RA2_SOI_AX Node A11 GADS Format

N	Description	Units	Byte Size	Data Type	Dim.
1	**Centre of the averaged measurement**	-	8	do	1
2	**Number of Ku band FFT samples**	-	4	sl	1
3	**Number of Ku band DFT samples**	-	4	sl	1
4	**Total number of Ku band waveforms samples**	-	4	sl	1
5	**Total number of S band waveforms samples**	-	4	sl	1
6	**DFT abscissa numbering offset**	-	4	sl	1
7	**Radial distance away from nadir point at which land contamination would be sufficient to corrupt the path delay by 5mm**	m	8	do	1
8	**Spare**		40	uc	1
TOTAL			**76**		

14.6.10.1.2 Node A12 GADS

The format of the GADS is shown below.

Table 14.6.10.1.2-1 RA2_SOI_AX Node A12 GADS Format

N	Description	Units	Byte Size	Data Type	Dim.

1	**Compatibility threshold for the pole location data**	s	8	do	1
2	**Threshold for meteo data nominal interpolation**	s	8	do	1
3	**Threshold for meteo data degraded interpolation**	s	8	do	1
4	**Threshold for meteo data extrapolation**	s	8	do	1
5	**Expected values of the indicator for meteo parameters**	-	24	sl	6
6	**Number of vertical levels to be extracted from profiles files**	-	4	sl	1
7	**Spare**	-	40	uc	1
TOTAL			**100**		

14.6.10.1.3 Node A21 GADS

The format of the GADS is shown below.

Table 14.6.10.1.3-1 RA2_SOI_AX Node A21 GADS Format

N	Description	Units	Byte Size	Data Type	Dim.
1	**Minimum expected abscissa of the central sample - ice2**	-	32	do	4
2	**Maximum expected abscissa of the central sample - ice2**	-	32	do	4
3	**Option for thermal noise computation - ice2**	-	16	sl	4
4	**Abscissa of the first sample for noise estimation - ice2**	-	32	do	4
5	**Abscissa of the last sample for noise estimation - ice2**	-	32	do	4
6	**Minimum abscissa of the leading edge - ice2**	-	32	do	4
7	**Thermal noise weighting factor for leading edge id. - ice2**	-	32	do	4
8	**Maximum abscissa for leading edge evaluation - ice2**	-	32	do	4
9	**Leading edge width threshold - ice2**	s	32	do	4

Table 14.6.10.1.3-1 RA2_SOI_AX Node A21 GADS Format

N	Description	Units	Byte Size	Data Type	Dim.
10	**Maximum left gap of the leading edge - ice2**	-	32	do	4
11	**Thermal noise weighting factor for estim. conditions - ice2**	-	32	do	4
12	**Left shift of the beginning of the leading edge - ice2**	-	32	do	4
13	**Right shift of the end of the leading edge - ice2**	-	32	do	4
14	**Minimum abscissa of the estimation window - ice2**	-	32	do	4
15	**Maximum abscissa of the estimation window - ice2**	-	32	do	4
16	**Right offset of the estimation window - ice2**	-	32	do	4
17	**Maximum abscissa of the slope window - ice2**	-	32	do	4
18	**Maximum abscissa of the slope window for mispointing - ice2**	-	32	do	4
19	**Width of the first slope window - ice2**	s	32	do	4
20	**Width of the second slope window - ice2**	s	32	do	4
21	**Width of the slope window for mispointing - ice2**	s	32	do	4
22	**Initial value of the residual - ice2**	-	32	do	4
23	**Minimum expected width of the leading edge - ice2**	-	32	do	4
24	**Maximum expected width of the leading edge - ice2**	-	32	do	4
25	**Step for the fine estimation of Epoch - ice2**	-	32	do	4
26	**Step for the fine estimation of SigmaL - ice2**	-	32	do	4
27	**Default thermal noise level**	FFT power unit	32	do	4
28	**Limit argument for the erf function**	-	8	do	1

Table 14.6.10.1.3-1 RA2_SOI_AX Node A21 GADS Format

N	Description	Units	Byte Size	Data Type	Dim.
29	**Factor applied to the WF maximum to obtain the LE threshold**	-	32	do	4
30	**Minimum abscissa of the mispointing estimation ice2**	-	32	do	4
31	**Maximum abscissa of the mispointing estimation ice2**	-	32	do	4
32	**Spare**	-	32	uc	1
TOTAL			**984**		

14.6.10.1.4 Node A22 GADS

The format of the GADS is shown below.

Table 14.6.10.1.4-1 RA2_SOI_AX Node A22 GADS Format

N	Description	Units	Byte Size	Data Type	Dim.
1	**Skewness coefficient - ocean**	-	32	do	4
2	**Minimum expected abscissa of the central sample - ocean**	-	32	do	4
3	**Maximum expected abscissa of the central sample - ocean**	-	32	do	4
4	**Option for thermal noise computation - ocean**	-	16	sl	4
5	**Abscissa of the first sample for noise computation - ocean**	-	32	do	4
6	**Abscissa of the last sample for noise computation - ocean**	-	32	do	4

Table 14.6.10.1.4-1 RA2_SOI_AX Node A22 GADS Format

N	Description	Units	Byte Size	Data Type	Dim.
7	**Width of the amplitude window - ocean**	-	32	do	4
8	**Abscissa of the first sample for estimation - ocean**	-	32	do	4
9	**Abscissa of the last sample for estimation - ocean**	-	32	do	4
10	**Thermal noise weighting factor for estim. conditions - ocean**	-	32	do	4
11	**Ice2 MQE threshold - ocean**	-	32	do	4
12	**Weighting factor for amplitude estimation - ocean**	-	32	do	4
13	**Normalised amplitude threshold for epoch init. - ocean**	-	32	do	4
14	**Default value of SigmaC - ocean**	s	32	do	4
15	**Maximum number of iterations for the uniform LSE - ocean**	-	16	sl	4
16	**Uniform weighting constant - ocean**	-	32	do	4
17	**Minimum value of the adaptative gain Lambda - ocean**	-	32	do	4
18	**Maximum value of the adaptative gain Lambda - ocean**	-	32	do	4
19	**Width of the fine estimation window - ocean**	s	32	do	4
20	**Half width of the leading edge weighting zone - ocean**	-	32	do	4
21	**Order 0 weighting coef. for the first plateau - ocean**	-	32	do	4
22	**Order 1 weighting coef. for the first plateau - ocean**	-	32	do	4
23	**Order 2 weighting coef. for the first plateau - ocean**	-	32	do	4
24	**Order 3 weighting coef. for the first plateau - ocean**	-	32	do	4
25	**Order 4 weighting coef. for the first plateau - ocean**	-	32	do	4
26	**Order 5 weighting coef. for the first plateau - ocean**	-	32	do	4
27	**Order 0 weighting coef. for the leading edge - ocean**	-	32	do	4

Table 14.6.10.1.4-1 RA2_SOI_AX Node A22 GADS Format

N	Description	Units	Byte Size	Data Type	Dim.
28	**Order 1 weighting coef. for the leading edge - ocean**	-	32	do	4
29	**Order 2 weighting coef. for the leading edge - ocean**	-	32	do	4
30	**Order 3 weighting coef. for the leading edge - ocean**	-	32	do	4
31	**Order 4 weighting coef. for the leading edge - ocean**	-	32	do	4
32	**Order 5 weighting coef. for the leading edge - ocean**	-	32	do	4
33	**Order 0 weighting coef. for the trailing edge - ocean**	-	32	do	4
34	**Order 1 weighting coef. for the trailing edge - ocean**	-	32	do	4
35	**Order 2 weighting coef. for the trailing edge - ocean**	-	32	do	4
36	**Order 3 weighting coef. for the trailing edge - ocean**	-	32	do	4
37	**Order 4 weighting coef. for the trailing edge - ocean**	-	32	do	4
38	**Order 5 weighting coef. for the trailing edge -ocean**	-	32	do	4
39	**First initial value of the MQE - ocean**	-	32	do	4
40	**Second initial value of the MQE - ocean**	-	32	do	4
41	**Maximum number of iterations of the weighted LSE - ocean**	-	16	sl	4
42	**Minimum SWH value in the estimation process - ocean**	m	32	do	4
43	**Maximum SWH value in the estimation process - ocean**	m	32	do	4
44	**Minimum number of iterations in the estim. process - ocean**	-	16	sl	4
45	**Threshold of the MQE ratio testing - ocean**	-	32	do	4
46	**Spare**		40	uc	1
TOTAL			**1416**		

14.6.10.1.5 Node A24 GADS

The format of the GADS is shown below.

Table 14.6.10.1.5-1 RA2_SOI_AX Node A24 GADS Format

N	Description	Units	Byte Size	Data Type	Dim.
1	**MQE threshold**	-	32	do	4
2	**Averaging threshold for the altimeter range**	-	16	sl	4
3	**Averaging threshold for the significant waveheight**	-	16	sl	4
4	**Averaging threshold for the backscatter coefficient**	-	16	sl	4
5	**Averaging threshold for the off-nadir angle**	-	16	sl	4
6	**Weighting factor for altimeter range edition**	-	32	do	4
7	**Weighting factor for significant waveheight edition**	-	32	do	4
8	**Weighting factor for backscatter coefficient edition**	-	32	do	4
9	**Weighting factor for off-nadir angle edition**	-	32	do	4
10	**Spare**	-	40	uc	1
TOTAL			**264**		

14.6.10.1.6 Node A25 GADS

This GADS is no longer used.

14.6.10.1.7 Node A31 GADS

The format of the GADS is shown below.

Table 14.6.10.1.7-1 RA2_SOI_AX Node A31 GADS Format

N	Description	Units	Byte Size	Data Type	Dim.
1	**Maximum value of solar flux**	10^{-22} W/(m2Hz)	8	do	1
2	**Maximum order of the devel. of f0F2 geographical function in longitude**	-	4	sl	1
3	**Param. giving the maximum indexes of f0F2 functions for an order m**	-	36	sl	9
4	**NMAX**	-	4	sl	1
5	**Param. defining subset of f0F2 functions providing M(3000)F2 func**	-	40	sl	10
6	**Number of harmonics in the development of f0F2 and M(3000)F2**	-	8	sl	2
7	**Latitude of the North magnetic pole**	radians	8	do	1
8	**Longitude of the North magnetic pole**	radians	8	do	1
9	**Header of table YMTAB for the calculation of YM in hloc**	hour	24	do	3
10	**Header of table YMTAB for the calculation of YM in f0F2**	MHz	24	do	3
11	**12 values of YM [9]**	km	864	do	108
12	**Header of table YRAT1 for the calculation of RAT1 in DSZA**	degrees	24	do	3
13	**Header of table YRAT1 for the calculation of RAT1 in hloc**	hour	24	do	3
14	**7 values of YRAT1 [4]**	-	224	do	28
15	**Header of table YRAT2 for the calculation of RAT2 in DSZA**	degrees	24	do	3
16	**Header of table YRAT2 for the calculation of RAT2 in hloc**	hour	24	do	3

Table 14.6.10.1.7-1 RA2_SOI_AX Node A31 GADS Format

N	Description	Units	Byte Size	Data Type	Dim.
17	**7 values of YRAT2 [2]**	-	112	do	14
18	**Scale factor threshold for YT**	-	8	do	1
19	**Critical frequency threshold for YT**	MHz	8	do	1
20	**Header of tables SLOP and CEPT in fqF2**	MHz	24	do	3
21	**Header of tables SLOP and CEPT in φm**	degrees	24	do	3
22	**4 values of SLOP(1) [3]**	-	96	do	12
23	**4 values of SLOP(2) [3]**	-	96	do	12
24	**4 values of SLOP(3) [3]**	-	96	do	12
25	**4 values of CEPT(1) [3]**	-	96	do	12
26	**4 values of CEPT(2) [3]**	-	96	do	12
27	**4 values of CEPT(3) [3]**	-	96	do	12
28	**Header of table RATK for the calculation of RAT1 in DSZA**	degrees	24	do	3
29	**Header of table RATK for the calculation of RAT1 in hloc**	hour	24	do	3
30	**4 values of RATK(1) [4]**	-	128	do	16
31	**4 values of RATK(2) [4]**	-	128	do	16
32	**4 values of RATK(3) [4]**	-	128	do	16
33	**Spare**	-	40	uc	1
TOTAL			**2572**		

14.6.10.1.8 Node A32 GADS

Table 14.6.10.1.8-1 RA2_SOI_AX Node A32 GADS Format

N	Description	Units	Byte Size	Data Type	Dim
1	**Interpolation windows size for MSS**		4	sl	1
2	**Interpolation windows size for geoid**		4	sl	1
3	**Spare**		40	uc	1
TOTAL			**48**		

14.6.10.1.9 Node A33 GADS

The format of the GADS is shown below.

Table 14.6.10.1.9-1 RA2_SOI_AX Node A33 GADS Format

N	Description	Units	Byte Size	Data Type	Dim.
1	**Frequencies of the astronomical variables at 1/1/1900 0h (mean longitude of the moon, mean longitude of the sun, mean longitude of the lunar perigee, opposite of the mean longitude of the lunar ascending node, mean longitude of the solar perigee)**	degrees/day	40	do	5
2	**Phases of the astronomical variables at 1/1/1900 0h (mean longitude of the moon, mean longitude of the sun, mean longitude of the lunar perigee, opposite of the mean longitude of the lunar ascending node, mean longitude of the solar perigee)**	degrees	40	do	5
3	**solution 1 admittance coefficients 'a' for a tidal wave number 9 to 25**	-	136	do	17
4	**indexes of solution 1 admittance cofficients 'a' for a tidal wave number 9 to 25**	-	68	sl	17

Table 14.6.10.1.9-1 RA2_SOI_AX Node A33 GADS Format

N	Description	Units	Byte Size	Data Type	Dim.
5	**solution 1 admittance coefficients 'b' for a tidal wave number 9 to 25**		136	do	17
6	**indexes of solution 1 admittance cofficients 'b' for a tidal wave number 9 to 25**	-	68	sl	17
7	**solution 1 admittance coefficients 'c' for a tidal wave number 9 to 25**	-	136	do	17
8	**indexes of solution 1 admittance cofficients 'c' for a tidal wave number 9 to 25**	-	68	sl	17
9	**Frequency of the solution 1 tidal wave number 1 to 25**	radians/s	200	do	25
10	**solution 2 admittance coefficients 'a' for a tidal wave number 12 to 29**	-	144	do	18
11	**indexes of solution 2 admittance coefficients 'a' for tidal wave number 12 to 29**	-	72	sl	18
12	**solution 2 admittance coefficients 'b' for tidal wave number 12 to 29**	-	144	do	18
13	**indexes of solution 2 admittance coefficients 'b' for tidal wave number 12 to 29**	-	72	sl	18
14	**solution 2 admittance coefficients 'c' for tidal wave number 12 to 29**		144	do	18
15	**indexes of solutiom 2 admittance coefficients 'c' for tidal wave number 12 to 29**		72	sl	18
16	**Frequency of the solution 2 tidal wave number 1 to 29**	radians/s	232	do	29
17	**X averaged pole coordinate**	arcseconds	8	do	1
18	**Y averaged pole coordinate**	arcseconds	8	do	1
19	**Love numbers (H2, K2, H3, K3)**		32	do	4
20	**Scale amplitude factor**		8	do	1
21	**Gravity**	ms^{-2}	8	do	1

Table 14.6.10.1.9-1 RA2_SOI_AX Node A33 GADS Format

N	Description	Units	Byte Size	Data Type	Dim.
22	**Spare**		24	uc	1
TOTAL			**1860**		

14.6.10.1.10 Node A34 GADS

The format of the GADS is shown below.

Table 14.6.10.1.10-1 RA2_SOI_AX Node A34 GADS Format

N	Description	Units	Byte Size	Data Type	Dim.
1	**Time intervals for MWR (interp, extrap, no gap)**	s	24	do	3
2	**Header of the wind table (res, min, max)**	dB	24	do	3
3	**Tabulated values of RA-2 windspeed**	m/s	592	do	74
4	**Oxygen attenuation (Ku and S)**	dB	16	do	2
5	**Water Vapour absorption (Ku and S)**	dB/(g.cm-2)	16	do	2
6	**Cloud Liquid Water absorption (Ku and S)**	dB/(kg.m-2)	16	do	2
7	**Climatological value for water vapour content**	g.cm-2	8	do	1
8	**Climatological value for cloud liquid water content**	Kg/m2	8	do	1
9	**Climatological value for Ku-Band backscatter coeff.**	dB	8	do	1
10	**Time intervals for RA2 (interp, extrap, no gap**	s	24	do	3
11	**Rain flag coefficient**	-	8	do	1
12	**Liquid content threshold**	Kg/m2	8	do	1
13	**Delta sigma0 difference threshold**	dB	8	do	1
14	**Header of the expected Ku-band sigma0 (res,min,max)**	dB	24	do	3

Table 14.6.10.1.10-1 RA2_SOI_AX Node A34 GADS Format

N	Description	Units	Byte Size	Data Type	Dim.
15	**Tabulated values of expected Ku-Band sigma0**	dB	4000	do	500
16	**Tabulated values of uncertainty of expected Ku-Band sigma0**	dB	4000	do	500
17	**Number of neurons**	-	4	sl	1
18	**Mean value for sigma0 in Ku band**	dB	8	do	1
19	**Standard deviation value for sima0 in Ku band**	dB	8	do	1
20	**Mean value for TB23**	K	8	do	1
21	**Standard deviation value for TB23**	K	8	do	1
22	**Mean value for TB36**	K	8	do	1
23	**Standard deviation value for TB36**	K	8	do	1
24	**Mean value for the atmospheric attenuation in Ku band**	dB	8	do	1
25	**Standard deviation value for the atmospheric attenuation in Ku-band**	dB	8	do	1
26	**W1_sigma0, weights applied to Sigma0_Ku at the first layer of the MWR neural network for the atmospheric attenuation in Ku-band**	-	64	do	8
27	**W1_TB23 weights applied to TB23 at the first layer of the MWR neural network for the atmospheric attenuation in Ku-band**	-	64	do	8
28	**W1_TB36 weights applied to TB36 at the first layer of the MWR neural network for the atmospheric attenuation in Ku-band**	-	64	do	8
29	**W2, weights applied at the second layer of the MWR neural network, for the atmospheric attenuation in Ku-Band**	-	64	do	8

Table 14.6.10.1.10-1 RA2_SOI_AX Node A34 GADS Format

N	Description	Units	Byte Size	Data Type	Dim.
30	**Bias1, bias applied at the first layer of the MWR neural network, for the atmospheric attenuation in Ku-Band**	-	64	do	8
31	**Bias2, bias applied at the first layer of the MWR neural network, for the atmospheric attenuation in Ku-Band**	-	8	do	1
32	**Mean value for the atmospheric attenuation in S band**	dB	8	do	1
33	**Standard deviation value for the atmospheric attenuation in S band**	dB	8	do	1
34	**W1_sigma0 weights applied to sigma0_Ku at the first layer of the MWR neural network for the atmospheric attenuation in S-band**	-	64	do	8
35	**W1_TB23 weights applied to TB23 at the first layer of the MWR neural network for the atmospheric attenuation in S-band**	-	64	do	8
36	**W1_TB36 weights applied to TB36 at the first layer of the MWR neural network for the atmospheric attenuation in S-band**	-	64	do	8
37	**W2, weights applied at the second layer of the MWR neural network, for the atmospheric attenuation in S-Band**	-	64	do	8
38	**Bias1, bias applied at the first layer of the MWR neural network, for the atmospheric attenuation in S-Band**	-	64	do	8
39	**Bias2, bias applied at the first layer of the MWR neural network, for the atmospheric attenuation in S-Band**	-	8	do	1
40	**Mean value for the wet tropospheric correction**	cm	8	do	1
41	**standard deviation value for the wet tropospheric correction**	cm	8	do	1

Table 14.6.10.1.10-1 RA2_SOI_AX Node A34 GADS Format

N	Description	Units	Byte Size	Data Type	Dim.
42	**W1_sigma0 weights applied to sigma0_Ku at the first layer of the MWR neural network for the wet tropospheric correction**	-	64	do	8
43	**W1_TB23 weights applied to TB23 at the first layer of the MWR neural network for the wet tropospheric correction**	-	64	do	8
44	**W1_TB36 weights applied to TB36 at the first layer of the MWR neural network for the wet tropospheric correction**	-	64	do	8
45	**W2, weights applied at the second layer of the MWR neural network, for the wet tropospheric correction**	-	64	do	8
46	**Bias1, bias applied at the first layer of the MWR neural network, for the wet tropospheric correction**	-	64	do	8
47	**Bias2, bias applied at the first layer of the MWR neural network, for the wet tropospheric correction**	-	8	do	1
48	**Mean value for the water vapour content**	g/cm2	8	do	1
49	**Standard deviation value for the water vapour content**	g/cm2	8	do	1
50	**W1_sigma0 weights applied to sigma0_Ku at the first layer of the MWR neural network for the water vapour content**	-	64	do	8
51	**W1_TB23 weights applied to TB23 at the first layer of the MWR neural network for the water vapour content**	-	64	do	8
52	**W1_TB36 weights applied to TB36 at the first layer of the MWR neural network for the water vapour content**	-	64	do	8
53	**W2, weights applied at the second layer of the MWR neural network, for the water vapour content**	-	64	do	8
54	**Bias1, bias applied at the first layer of the MWR neural network, for the water vapour content**	-	64	do	8

Table 14.6.10.1.10-1 RA2_SOI_AX Node A34 GADS Format

N	Description	Units	Byte Size	Data Type	Dim.
55	**Bias2, bias applied at the first layer of the MWR neural network, for the water vapour content**	-	8	do	1
56	**Mean value for the liquid water content**	mg/cm2	8	do	1
57	**Standard deviation value for the liquid water content**	mg/cm2	8	do	1
58	**W1_sigma0 weights applied to sigma0_Ku at the first layer of the MWR neural network for the liquid water content**	-	64	do	8
59	**W1_TB23 weights applied to TB23 at the first layer of the MWR neural network for the liquid water content**	-	64	do	8
60	**W1_TB36 weights applied to TB36 at the first layer of the MWR neural network for the liquid water content**	-	64	do	8
61	**W2, weights applied at the second layer of the MWR neural network, for the liquid water content**	-	64	do	8
62	**Bias1, bias applied at the first layer of the MWR neural network, for the liquid water content**	-	64	do	8
63	**Bias2, bias applied at the first layer of the MWR neural network, for the liquid water content**	-	8	do	1
64	**Slope applied to sigma0_Ku inside the MWR neural network**	-	8	do	1
65	**Bias applied to sigma0_Ku inside the MWR neural network**	-	8	do	1
66	**Slope applied to TB23 inside the MWR neural network**	-	8	do	1
67	**Bias applied to TB23 inside the MWR neural network**	-	8	do	1
68	**Slope applied to TB36 inside the MWR neural network**	-	8	do	1
69	**Bias applied to TB36 inside the MWR neural network**	-	8	do	1

Table 14.6.10.1.10-1 RA2_SOI_AX Node A34 GADS Format

N	Description	Units	Byte Size	Data Type	Dim.
70	**Delta offset to be applied to sigma 0 in S-Band**	dB	8	do	1
71	**Number of row inside the mask**	-	8	ss	4
72	**Day of the season**	-	8	ss	4
73	**Mask Winter North**	-	28	ss	14
74	**Mask Summer North**	-	28	ss	14
75	**Mask Winter South**	-	28	ss	14
76	**Mask Summer South**	-	28	ss	14
77	**M_VAR**	-	24	do	3
78	**Std_VAR**	-	24	do	3
79	**C**	-	96	do	12
80	**Alpha**	-	2	ss	1
81	**K**	-	2	ss	1
82	**Min_VAL**	-	8	do	1
83	**Spare**	-	32	uc	32
TOTAL			**10928**		

Note: For field 15 and 16, a number of 500 elements have been chosen. This number may change following recommendations of experts.

14.6.10.1.11 Node A35 GADS

The format of the GADS is shown below.

Table 14.6.10.1.11-1 RA2_SOI_AX Node A35 GADS Format

N	Description	Units	Byte Size	Data Type	Dim.
1	**Coef. for inverted barometer height calculation**	mm/hPa	8	do	1
2	**Gravity at mean sea level and 45° latitude**	m/s2	8	do	1
3	**Coefficients of Tetens formula for saturation water vapour with respect to ice**	-	24	do	3
4	**Coefficients of Tetens formula for saturation water vapour with respect to liquid water**	-	24	do	3
5	**Molar mass of dry air**	kg	8	do	1
6	**Molar mass of water vapour**	kg	8	do	1
7	**Mean vertical gradient of temperature**	K/m	8	do	1
8	**Pressure corresponding to the 21 standard vertical levels of the ECMWF model**	hPa	84	sl	21
9	**Universal gas constant**	J/mole.K	8	do	1
10	**Multiplicative constant for wet tropospheric correction**	-	8	do	1
11	**Spare**	-	40	uc	
TOTAL			**228**		

14.6.10.1.12 Node A41 GADS

The format of the GADS is shown below.

Table 14.6.10.1.12-1 RA2_SOI_AX Node A41 GADS Format

N	Description	Units	Byte Size	Data Type	Dim.
1	**Number of averaged waveforms in Ku band**	-	4	sl	1
2	**Minimum acceptable percentage of RA2 processing error free DSR**	10-2%	2	us	1
3	**Minimum acceptable percentage of MWR processing error free DSR**	10-2%	2	us	1
4	**Threshold for S-Band flag anomaly**	-	4	sl	1
5	**Spare**	-	36	uc	1
TOTAL			**48**		

14.6.11 RA2 Constants Data File

This file contains constants used during processing.

FILE ID: RA2_CST_AX TYPE: Auxiliary

USE: Level-1B and Level 2 RA-2 / MWR processing

UPDATED: TBD

SIZE: MPH(1247 bytes) + SPH(378 bytes) + GADS (88 bytes)= 1713 bytes

14.6.11.1 Format

The file structure is shown in the table below:

MPH
Auxiliary Data SPH (as described in Volume 16) with 1 DSD *DSD pointing to the GADS*
GADS

14.6.11.1.1 GADS

The format of the GADS is shown below.

Table 14.6.11.1.1-1 RA2_CST_AX GADS Format

N	Description	Units	Byte Size	Data Type	Dim.
1	**Semi-major axis of WGS84 ellipsoid**	m	8	do	1
2	**Semi-minor axis of WGS84 ellipsoid**	m	8	do	1
3	**Inverse of flattening coefficient of WGS84 ellipsoid**	-	8	do	1
4	**Pi**	-	8	do	1
5	**Velocity of light**	m/s	8	do	1
6	**Mean satellite altitude**	m	8	do	1
7	**Cold space temperature for Channel 1**	K	8	do	1

8	**Cold space temperature for Channel 2**	K	8	do	1
	Spare	-	24	do	3
TOTAL			**88**		

14.6.12 Ice1 / Sea Ice Configuration (System) File

This file contains the processing parameters used for the ice1/sea ice processing.

FILE ID: RA2_ICT_AX

TYPE: Auxiliary

USE: Level 2 RA-2 processing

UPDATED: Infrequently SIZE: MPH(1247 bytes) + SPH(378 bytes) + GADS (124 bytes) = 1749 bytes

14.6.12.1 Format

The file structure is shown in the table below:

MPH
Auxiliary Data SPH (as described in Volume 16) with 1 DSD *DSD pointing to the GADS*
GADS

14.6.12.1.1 GADS

The format of the GADS is shown below.

Table 14.6.12.1.1-1 RA2_ICT_AX GADS Format

N	Description	Units	Byte Size	Data Type	Dim.
1	**retracker threshold OCOG Ku**	FFT power units	8	do	1
2	**retracker threshold OCOG S**	FFT power units	8	do	1
3	**retracker threshold sea ice Ku**	FFT power units	8	do	1
4	**retracker threshold sea ice S**	FFT power units	8	do	1
5	**retracker start bin OCOG Ku**	filters	2	us	1
6	**retracker start bin OCOG S**	filters	2	us	1
7	**retracker start bin sea ice Ku**	filters	2	us	1
8	**retracker start bin sea ice S**	filters	2	us	1
9	**retracker end bin OCOG Ku**	filters	2	us	1
10	**retracker end bin OCOG S**	filters	2	us	1
11	**retracker end bin sea ice Ku**	filters	2	us	1
12	**retracker end bin sea ice S**	filters	2	us	1
13	**retracker lower bound OCOG Ku**	filters	2	us	1
14	**retracker lower bound OCOG S**	filters	2	us	1
15	**retracker upper bound OCOG Ku**	filters	2	us	1
16	**retracker upper bound OCOG S**	filters	2	us	1
17	**retracker lower bound sea ice Ku**	filters	2	us	1
18	**retracker lower bound sea ice S**	filters	2	us	1
19	**retracker upper bound sea ice Ku**	filters	2	us	1
20	**retracker upper bound sea ice S**	filters	2	us	1
21	**additional end gate1 Ku**	filters	2	us	1
22	**additional end gate1 S**	filters	2	us	1
23	**additional power threshold Ku**	-	8	do	1

Table 14.6.12.1.1-1 RA2_ICT_AX GADS Format

N	Description	Units	Byte Size	Data Type	Dim.
24	**additional power threshold S**	-	8	do	1
25	**additional gate threshold Ku**	-	8	do	1
26	**additional gate threshold S**	-	8	do	1
27	**noise power first gate Ku**	filters	2	us	1
28	**noise power first gate S**	filters	2	us	1
29	**noise power last gate Ku**	filters	2	us	1
30	**noise power last gate S**	filters	2	us	1
31	**peakiness low threshold**	-	8	do	1
32	**peakiness high threshold**	-	8	do	1
TOTAL			**124**		

14.6.13 Sea State Bias Table File

This file contains the values of the sea state bias corrections for the Ku bands and S band used in the FDGDR and GDR processing. It ia a double input table depending on significant waveheight and windspeed. The coverage for SWH is from 0 to 12 m with a resolution of 0.25 m, while the coverage for windspeed is from 0 to 25 m/s with a resolution of 0.25 m/s. Two values are recorded at each gridpoint, one for Ku band and one for S band.

FILE ID: RA2_SSB_AX

TYPE: Auxiliary

USE: Level 2 RA-2 processing

UPDATED: Infrequently

SIZE: MPH(1247 bytes) + SPH(658 bytes) + DSs (39826 bytes)

14.6.13.1 14.6.13.1 Format

The file structure is shown in the table below:

MPH
Auxiliary Data SPH (as described in Volume 16) with 2 DSD *DSD pointing to the General GADS* *DSD pointing to the Grid Data GADS*
General GADS
Grid Data GADS

14.6.13.1.1 General GADS

The GADS contains information describing the whole file. The format of the GADS is shown below.

Table 14.6.13.1.1-1 RA2_SSB_AX General GADS Format

N	Description	Units	Byte Length	Data Type	Dim.
1	**SWH_GRID_SIZE=**	keyword	14	uc	14
	Resolution of the grid in SWH (dSWH)	m	15	Afl	1
	<m>	units	3	uc	3
	newline character	terminator	1	uc	1
2	**SWH_FIRST=**	keyword	10	uc	10

Table 14.6.13.1.1-1 RA2_SSB_AX General GADS Format

N	Description	Units	Byte Length	Data Type	Dim.
	SWH of first point on the grid (SWHf)	m	15	Afl	1
	<m>	units	3	uc	3
	newline character	terminator	1	uc	1
3	**SWH_LAST=**	keyword	9	uc	9
	SWH of last point on the grid (SWHl)	m	15	Afl	1
	<m>	units	3	uc	3
	newline character	terminator	1	uc	1
4	**WS_GRID_SIZE=**	keyword	13	uc	13
	Resolution of the grid in wind speed (dWS)	m/s	15	Afl	1
	<m/s>	units	5	uc	5
	newline character	terminator	1	uc	1
5	**WS_FIRST=**	keyword	9	uc	9
	Wind speed of first point on the grid (WSf)	m/s	15	Afl	1
	<m/s>	units	5	uc	5
	newline character	terminator	1	uc	1
6	**WS_LAST=**	keyword	8	uc	8
	Wind speed of last point on the grid (WSl)	m/s	15	Afl	1
	<m/s>	units	5	uc	5
	newline character	terminator	1	uc	1
7	**Spare (blank characters)**	-	50	uc	50
	newline character	terminator	1	uc	1

Table 14.6.13.1.1-1 RA2_SSB_AX General GADS Format

N	Description	Units	Byte Length	Data Type	Dim.
TOTAL			**234**		

14.6.13.1.2 Grid Data GADS

This GADS provides the data in grid format.The GADS consists of several GADSRs. Each record corresponds to a SWH value. The first record corresponds to the first value of the SWH, and the last record is relative to the last value of the SWH. Two values are provided at each wind speed, one for Ku-band and one for S-band. The format of each GADSR is given below.

Table 14.6.13.1.2-1 RA2_SSB_AX Grid Data GADSR Format

N	Description	Units	Byte Size	Data Type	Dim.
1	**Sea state bias corrections** Ordered as: Sea state bias correction for Ku band at WS_f Sea state bias correction for S band at WS_f Sea state bias correction for Ku band at WS_f+dWS Sea state bias correction for S band at WS_f+dWS ..... Sea state bias correction for Ku band at WS_l Sea state bias correction for S band at WS_l	m	808	fl	202
TOTAL			**808**		

14.6.14 Modified Dip Map File

This file contains the values of the modified magnetic dip used in the computation of the ionospheric correction from the Bent model. The values are recorded on a regular grid. The coverage of the grid is from 0 to 358 degrees in longitude and from -82 to 82 degrees in latitude. The resolution of the grid is 2 degree in longitude and 2 degree in latitude.

One value is recorded at each gridpoint.

FILE ID: RA2_DIP_AX

TYPE: Auxiliary

USE: Level 2 RA-2 processing

UPDATED: Infrequently

SIZE: MPH(1247 bytes) + SPH(658 bytes) + DSs (60019 bytes)

14.6.14.1 Format

The file structure is shown in the table below:

MPH
Auxiliary Data SPH (as described in Volume 16) with 2 DSD *DSD pointing to the General GADS* *DSD pointing to the Grid Data GADS*
General GADS
Grid Data GADS

14.6.14.1.1 General GADS

The general GADS shall follow the format described in Table 14.6.6.1.1-1.

14.6.14.1.2 Grid Data GADS

This GADS provides the magnetic dip data in grid format.The GADS consists of several GADSRs. Each record corresponds to a longitude value. The first record corresponds to

the first value of the longitude, and the last record is relative to the last value of the longitude. The format of each GADSR is given below.

Table 14.6.14.1.2-1 RA2_DIP_AX Grid Data GADSR Format

N	Description	Units	Byte Size	Data Type	Dim.
1	**Magnetic dip values (from first latitude to last latitude)**	radians	332	fl	83
TOTAL			**332**		

14.6.15 Cartwright Amplitudes File

This file contains the values of Cartwright amplitudes of the tidal constituents harmonic coefficients and amplitude.

FILE ID: RA2_SET_AX

TYPE: Auxiliary

USE: Level 2 RA-2 processing

UPDATED: Infrequently

SIZE: MPH(1247 bytes) + SPH(658 bytes) + DSs(9788) = 11693 bytes

14.6.15.1 Format

The file structure is shown in the table below:

MPH

Auxiliary Data SPH (as described in Volume 16) with 2 DSD *DSD pointing to the General GADS* *DSD pointing to the Grid Data GADS*
General GADS
Grid Data GADS

14.6.15.1.1 General GADS

The GADS contains information describing the whole file. The format of the GADS is shown below.

Table 14.6.15.1.1-1 RA2_SET_AX General GADS Format

N	Description	Units	Byte Length	Data Type	Dim.
1	**N20=**	keyword	4	uc	4
	Number of values for the order 20	-	6	As	1
	newline character	terminator	1	uc	1
2	**N21=**	keyword	4	uc	4
	Number of values for the order 21	-	6	As	1
	newline character	terminator	1	uc	1
3	**N22=**	keyword	4	uc	4
	Number of values for the order 22	-	6	As	1
	newline character	terminator	1	uc	1
4	**N30=**	keyword	4	uc	4
	Number of values for the order 30	-	6	As	1

	newline character	terminator	1	uc	1
5	**N31=**	keyword	4	uc	4
	Number of values for the order 31	-	6	As	1
	newline character	terminator	1	uc	1
6	**N32=**	keyword	4	uc	4
	Number of values for the order 32	-	6	As	1
	newline character	terminator	1	uc	1
7	**N33=**	keyword	4	uc	4
	Number of values for the order 33	-	6	As	1
	newline character	terminator	1	uc	1
8	**Spare (blank characters)**	-	50	uc	50
	newline character	terminator	1	uc	1
TOTAL			**128**		

14.6.15.1.2 Grid Data GADS

This GADS provides the data in grid format.The GADS consists of several GADSRs. Each record corresponds to six harmonic coefficients and amplitude. The first record is related to the first term of the order N20. The last record is related to the last term of the order N33. The format of each GADSR is given below.

Table 14.6.15.1.2-1 RA2_SET_AX Grid Data GADSR Format

N	Description	Units	Byte Size	Data Type	Dim.
1	Harmonic coefficient $k1_{i,j}$	-	2	ss	1
2	Harmonic coefficient $k2_{i,j}$	-	2	ss	1

3	Harmonic coefficient $k3_{i,j}$	-	2	ss	1
4	Harmonic coefficient $k4_{i,j}$	-	2	ss	1
5	Harmonic coefficient $k5_{i,j}$	-	2	ss	1
6	Harmonic coefficient $k6_{i,j}$	-	2	ss	1
7	amplitude $amp_{i,j}$	m	8	do	1
TOTAL			**20**		

In the table above, i represents the order (20, 21, 22, 30, 31, 32, 33) and j represents the number of terms for each order (103, 162, 119, 17, 35, 31, 16) with j running faster than i.

14.6.16 Ocean Tide Solution 1 Map File

This file contains the values of the harmonic coefficients for the eight of the principal tide waves of the GOT00.2 model. They are used for the computation of the non-equilibrium ocean tide height in the FDGDR, IGDR and GDR processings. The values are recorded on a regular grid. The coverage of the grid is from 180 W to 179.5 E degrees in longitude and from -90 to +90 degrees in latitude. The resolution of the grid is 0.5 degree in longitude and 0.5 degree in latitude. Eight values of the harmonic coefficients (A1) and eight values of the harmonic coefficients (A2) are recorded at each grid point.

FILE ID: RA2_OT1_AX

TYPE: Auxiliary

USE: Level 2 RA-2 processing

UPDATED: Infrequently

SIZE: MPH(1247 bytes) + SPH(658 bytes) + DSs (approx 15.8 Mbytes)

14.6.16.1 Format

The file structure is shown in the table below:

MPH
Auxiliary Data SPH (as described in Volume 16) with 2 DSD *DSD pointing to the General GADS* *DSD pointing to the Grid Data GADS*
General GADS Grid Data GADS

14.6.16.1.1 General GADS

The general GADS shall follow the format described in Table 14.6.6.1.1-1.

14.6.16.1.2 Grid Data GADS

This GADS provides the harmonic coefficients in grid format.Each record corresponds to a longitude value. The first record corresponds to the first value of the longitude, and the last record is relative to the last value of the longitude. The format of each GADSR is given below.

Table 14.6.16.1.2-1 RA2_OT1_AX Grid Data GADSR Format

N	Description	Units	Byte Size	Data Type	Dim.
1	**coefficient A1 for tide wave 1 at** φf	10^{-1}mm	4	sl	1
2	**coefficient A2 for tide wave 1 at** φf	10^{-1}mm	4	sl	1
3	**coefficient A1 for tide wave2 at** φf	10^{-1}mm	4	sl	1
4	**coefficient A2 for tide wave 2 at** φf	10^{-1}mm	4	sl	1
...		...	...	...	1

16	**coefficient A2 for tide wave 8 at** $\varphi_f + d\varphi$	10^{-1}mm	4	sl	1
17	**coefficient A1 for tide wave 1 at** $\varphi_f + d\varphi$	10^{-1}mm	4	sl	1
18	**coefficient A2 for tide wave 1 at** $\varphi_f + d\varphi_f$	10^{-1}mm	4	sl	1
19	**coefficient A1 for tide wave 2 at** $\varphi_f + d\varphi$	10^{-1}mm	4	sl	1
...		...	...	...	1
5775	**coefficient A1 for tide wave 8 at** φ_l	10^{-1}mm	4	sl	1
5776	**coefficient A2 for tide wave 8 at** φ_l	10^{-1}mm	4	sl	1
TOTAL			**23104**		

Φ_f, Φ_l and $d\Phi$ are respectively the latitude of the first point, the latitude of the last point and the grid resolution in latitude.

14.6.17 Ocean Tide Solution 2 Map File

This file contains the values of the harmonic coefficients for the eleven principal tide waves of the FES2004 model. They are used for the computation of the non-equilibrium ocean tide height in the FDGDR, IGDR and GDR processings. The values are recorded on a regular grid. The coverage of the grid is from 180 W to 179.875 E degrees in longitude and from -90 to 90 degrees in latitude. The resolution of the grid is 0.125 degree in longitude and 0.125 degree in latitude. Eleven values of the harmonic coefficients (A1) and eleven values of the harmonic coefficients (A2) are recorded at each gridpoint.

FILE ID: RA2_OT2_AX

TYPE: Auxiliary

USE: Level 2 RA-2 processing

UPDATED: Infrequently

SIZE: MPH(1247 bytes) + SPH(658 bytes) + DSs (approx 63 Mbytes)

14.6.17.1 Format

The file structure is shown in the table below:

MPH
Auxiliary Data SPH (as described in Volume 16) with 2 DSD *DSD pointing to the General GADS* *DSD pointing to the Grid Data GADS*
General GADS Grid Data GADS

14.6.17.1.1 General GADS

The general GADS shall follow the format described in Table 14.6.6.1.1-1.

14.6.17.1.2 Grid Data GADS

This GADS provides the harmonic coefficients in grid format. Each record corresponds to a longitude value. The first record corresponds to the first value of the longitude, and the last record is relative to the last value of the longitude. The format of each GADSR is given below.

Table 14.6.17.1.2-1 RA2_OT2_AX Grid Data GADSR Format

N	Description	Units	Byte Size	Data Type	Dim.
1	**coefficient A1 for tide wave 1 at** φf	10^{-1} mm	4	sl	1

2	**coefficient A2 for tide wave 1 at** φf	10^{-1} mm	4	sl	1
3	**coefficient A1 for tide wave 2 at** φf	10^{-1} mm	4	sl	1
4	**coefficient A2 for tide wave 2 at** φf	10^{-1} mm	4	sl	1
...		...	...	...	1
21	**coefficient A1 for tide wave 11 at** φf	10^{-1} mm	4	sl	1
22	**coefficient A2 for tide wave 11 at** φf	10^{-1} mm	4	sl	1
23	**coefficient A1 for tide wave 1 at** φf+dφ	10^{-1} mm	4	sl	1
24	**coefficient A2 for tide wave 1 at** φf+dφ	10^{-1} mm	4	sl	1
25	**coefficient A1 for tide wave2 at** φf+dφ	10^{-1} mm	4	sl	1
...		...	...	...	1
31701	**coefficient A1 for tide wave 11 at** φl	10^{-1} mm	4	sl	1
31702	**coefficient A2 for tide wave 11 at** φl	10^{-1} mm	4	sl	1
TOTAL			**126808**		

Φ_f, Φ_l and $d\Phi$ are respectively the latitude of the first point, the latitude of the last point and the grid resolution in latitude.

14.6.18 Tidal Loading Coefficients Map File (Solution 1)

This file contains the values of the harmonic coefficients for the eight principal tide waves of the GOT00.2 model. They are used for the computation of the tidal loading height in the FDGDR, IGDR and GDR processings. The values are recorded on a regular grid. The coverage of the grid is from 180 W to 179.5 E degrees in longitude and from -90 to 90 degrees in latitude. The resolution of the grid is 0.5 degree in longitude and 0.5 degree in latitude.

Eight values of the harmonic coefficients (B1) and eight values of the harmonic coefficients (B2) are recorded at each gridpoint.

FILE ID: RA2_TLG_AX

TYPE: Auxiliary

USE: Level 2 RA-2 processing

UPDATED: Infrequently

SIZE: MPH(1247 bytes) + SPH(658 bytes) + DSs (approx 31 Mbytes)

14.6.18.1 Format

The file structure is shown in the table below:

MPH
Auxiliary Data SPH (as described in Volume 16) with 2 DSD *DSD pointing to the General GADS* *DSD pointing to the Grid data GADS*
General GADS
Grid Data GADS

14.6.18.1.1 General GADS

The general GADS shall follow the format described in Table 14.6.6.1.1-1.

14.6.18.1.2 Grid Data GADS

This GADS provides the data in grid format.Each record corresponds to a longitude value.The first record corresponds to the first value of the longitude, and the last record is relative to the last value of the longitude. The format of each GADSR is given below.

Table 14.6.18.1.2-1 RA2_TLG_AX Grid Data GADSR Format

N	Description	Units	Byte Size	Data Type	Dim.
1	**coefficient B1 for tide wave 1 at φf**	10^{-1} mm	2	ss	1
2	**coefficient B2 for tide wave 1 at φf**	10^{-1} mm	2	ss	1
3	**coefficient B1 for tide wave 2 at φf**	10^{-1} mm	2	ss	1
4	**coefficient B2 for tide wave 2 at φf**	10^{-1} mm	2	ss	1
...		...	...	...	1
15	**coefficient B1 for tide wave 8 at φf**	10^{-1} mm	2	ss	1
16	**coefficient B2 for tide wave 8 at φf**	10^{-1} mm	2	ss	1
17	**coefficient B1 for tide wave 1 at φf +dφ**	10^{-1} mm	2	ss	1
18	**coefficient B2 for tide wave 1 at φf +dφ**	10^{-1} mm	2	ss	1
19	**coefficient B1 for tide wave 2 at φf +dφ**	10^{-1} mm	2	ss	1
...		...	...	...	1
5775	**coefficient B1 for tide wave 8 at φl**	10^{-1} mm	2	ss	1
5776	**coefficient B2 for tide wave 8 at φl**	10^{-1} mm	2	ss	1
TOTAL			**11552**		

Φ_f, Φ_l and $d\Phi$ are respectively the latitude of the first point, the latitude of the last point and the grid resolution in latitude.

14.6.19 Tidal Loading Coefficients Map File (Solution 2)

This file contains the values of the harmonic coefficients for the eleven principal tide waves, computed from the Francis Mazzega's method using the solution 2 ocean tide model as input. They are used for the computation of the height of the tidal loading effect in the FDGDR, IGDR and GDR processings. The values are recorded on a regular grid.

The coverage of the grid is from 180 W to 179.875 E degrees in longitude and from -90 to 90 degrees in latitude. The resolution of the grid is 0.125 degree in longitude and 0.125 degree in latitude. Eleven values of the harmonic coefficients (B1) and eleven values of the harmonic coefficients (B2) are recorded at each gridpoint.

FILE ID: RA2_TLD_AX

TYPE: Auxiliary

USE: Level 2 RA-2 processing

UPDATED: Infrequently

SIZE: MPH(1247 bytes) + SPH(658 bytes) + DSs (approx 31 Mbytes)

14.6.19.1 Format

The file structure is shown in the table below:

MPH
Auxiliary Data SPH (as described in Volume 16) with 2 DSD *DSD pointing to the General GADS* *DSD pointing to the Grid data GADS*
General GADS
Grid Data GADS

14.6.19.1.1 General GADS

The general GADS shall follow the format described in Table 14.6.6.1.1-1.

14.6.19.1.2 Grid Data GADS

This GADS provides the data in grid format. Each record corresponds to a longitude value. The first record corresponds to the first value of the longitude, and the last record is relative to the last value of the longitude. The format of each GADSR is given below.

Table 14.6.19.1.2-1 RA2_TLD_AX Grid Data GADSR Format

N	Description	Units	Byte Size	Data Type	Dim.
1	**coefficient B1 for tide wave 1 at φf**	10^{-1} mm	2	ss	1
2	**coefficient B2 for tide wave 1 at φf**	10^{-1} mm	2	ss	1
3	**coefficient B1 for tide wave 2 at φf**	10^{-1} mm	2	ss	1
4	**coefficient B2 for tide wave 2 at φf**	10^{-1} mm	2	ss	1
...		...	...	...	1
21	**coefficient B1 for tide wave 11 at φf**	10^{-1} mm	2	ss	1
22	**coefficient B2 for tide wave 11 atφf**	10^{-1} mm	2	ss	1
23	**coefficient B1 for tide wave 1 at φf +dφ**	10^{-1} mm	2	ss	1
24	**coefficient B2 for tide wave 1 at φf +dφ**	10^{-1} mm	2	ss	1
25	**coefficient B1 for tide wave 2 at φf +dφ**	10^{-1} mm	2	ss	1
...		...	...	...	1
31701	**coefficient B1 for tide wave 11 at φl**	10^{-1} mm	2	ss	1
31702	**coefficient B2 for tide wave 11 at φl**	10^{-1} mm	2	ss	1
TOTAL			**63404**		

Φ_f, Φ_l and $d\Phi$ are respectively the latitude of the first point, the latitude of the last point and the grid resolution in latitude.

14.6.20 Geoid Height File

This file contains the values of the geoid heights. The values are recorded on a regular grid. The coverage of the grid is from 0 to 359.75 degrees in longitude and from -85 to 85 degrees in latitude. The resolution of the grid is 0.25 degree in longitude and 0.25 degree in latitude.

FILE ID: RA2_GEO_AX

TYPE: Auxiliary

USE: Level 2 RA-2 processing

UPDATED: Infrequently

SIZE: MPH(1247 bytes) + SPH(658 bytes) + DSs (approx 3.7 Mbytes)

14.6.20.1 Format

The file structure is shown in the table below:

MPH
Auxiliary Data SPH (as described in Volume 16) with 2 DSD *DSD pointing to the General GADS* *DSD pointing to the Grid Data GADS*
General GADS
Grid Data GADS

14.6.20.1.1 General GADS

The general GADS shall follow the format described in Table 14.6.6.1.1-1.

14.6.20.1.2 Grid Data GADS

This GADS provides the geoid height data in grid format. Each record corresponds to a longitude value. The first record corresponds to the first value of the longitude, and the last record is relative to the last value of the longitude (1440 GADSRs, assuming 0.25 degree resolution). The format of each GADSR is given below.

Table 14.6.20.1.2-1 RA2_GEO_AX Grid Data GADSR Format

N	Description	Units	Byte Size	Data Type	Dim.
1	**Geoid Heights (from first latitude to last latitude)** Ordered as follows: geoid height at first latitude point geoid height at second latitude point .... geoid height at last latitude point.	mm	2724	sl	681
TOTAL			**2724**		

14.6.21 Ocean Depth/Land Elevation File

The RA2/MWR processor will use the common Digital Elevation Model defined in Volume 16.

14.6.22 RA2 Slope Model for Greenland Data File

This file contains the Greenland slope data to be used in the ice/sea ice processing.

FILE ID: RA2_SL1_AX

TYPE: Auxiliary

USE: Level 2 processing

UPDATED: infrequently

SIZE: MPH(1247 bytes) + SPH(658 bytes) + GADS (up to approx. 48 MBytes)

14.6.22.1 Format

The file structure is shown in the table below:

MPH
Auxiliary Data SPH (as described in Volume 16) with 2 DSD *DSD pointing to the General GADS* *DSD pointing to the Slopes GADS*
General GADS
Slopes GADS

14.6.22.1.1 General GADS

The contents of the General GADS are detailed in the following table.

Table 14.6.22.1.1-1 RA2_SL1_AX General GADS Format

N	Description	Units	Byte Size	Data Type	Dim.
1	**Model Number**	-	2	us	1
2	**Hemisphere flag**	-	2	us	1
3	**corner X**	m	8	do	1
4	**corner y**	m	8	do	1

5	**X-number**	-	2	us	1
6	**Y-number**	-	2	us	1
7	**resolution**	m	8	do	1
TOTAL			**32**		

14.6.22.1.2 Slopes GADS

This GADS is composed of X-number by Y-number (from field 5 and 6 in the general GADS record above) 2-dimensional (x,y) arrays (records) representing range slopes. For this GADS, up to 2000 x 3000 GADSRs are expected. The content of this GADS is ordered so that the y-index is incremented more rapidly than the x-index. The contents of the GADSR are detailed in the following table.

Table 14.6.22.1.2-1 RA2_SL1_AX Slopes GADSR Format

N	Description	Units	Byte Size	Data Type	Dim.
1	**x slope component**	-	4	fl	1
2	**y slope component**	-	4	fl	1
TOTAL			**8**		

14.6.23 RA2 Slope Model for Antarctica Data File

This file contains the Antarctica slope data to be used in the ice/sea ice processing.

FILE ID: RA2_SL2_AX

TYPE: Auxiliary

USE: Level 2 processing

UPDATED: infrequently

SIZE: MPH(1247 bytes) + SPH(378 bytes) + GADS (up to approx. 356 MBytes)

14.6.23.1 Format

The file structure is identical to that of the Greenland Slope Model file (RA2_SL1_AX) described in Section 14.6.22. The only difference is the number of GADSR in the Slopes GADS. For this file, up to 6670x6670 GADSRs are expected.

14.6.24 MWR Instrument Characterization Data

MWR radiometer is characterized during on-ground/pre-flight calibration in terms of radio frequency front-end relevant parameters such as switching assembly insertion losses, hot load mismatching, cold (sky horn) chain very accurate characterization, IF gain characteristics in terms of linearity, variation in temperature, noise figure, stability and sensitivity measurement, etc. Data is included for Channel 1 (23.6 GHz) and Channel 2 (36.5 GHz).

FILE ID: MWR_CHD_AX

TYPE: Auxiliary

USE: Level 1B MWR processing

UPDATED: infrequently

SIZE: MPH(1247 bytes) + SPH(1218 bytes) + DSs (4312 bytes) = 6777 bytes

14.6.24.1 Format

The file structure is shown in the table below:

MPH
Auxiliary Data SPH (as described in Volume 16) with 4 DSD *DSD pointing to the Thermistor Polynomial GADS* *DSD pointing to the Thermistor Limits GADS* *DSD pointing to the Receiver GADS* *DSD pointing to the Characterization GADS*
Thermistor Polynomial GADS
Thermistor Limits GADS
Receiver GADS
Characterization GADS

14.6.24.1.1 Thermistor Polynomial GADS

This GADS contains the thermistor polynomial coefficients to be used to evaluate the 32 on-board thermistors. The contents of the GADS are detailed in the following table.

Table 14.6.24.1.1-1 MWR_CHD_AX Thermistor Polynomial GADS Format

N	Description	Units	Byte Size	Data Type	Dim.
1	**Thermistor N1 coefficients 10 coefficients relevant to Thermistor n1 ordered by 0 to 9.**	10^{-15}	80	sd	10
2	**Thermistor N2 coefficients 10 coefficients relevant to Thermistor n2 ordered by 0 to 9.**	10^{-15}	80	sd	10
..	**...**	....	..	..	..
32	**Thermistor N32 coefficients 10 coefficients relevant to Thermistor n32 ordered by 0 to 9.**	10^{-15}	80	sd	10
33	**Spare**	-	40	uc	40
TOTAL			**2600**		

14.6.24.1.2 Thermistor Limits GADS

This GADS provides the expected maximum and minimum limits in temperature of the most significant thermistors. The format of the GADS is shown in the table below.

Table 14.6.24.1.2-1 MWR_CHD_AX Thermistor Limits GADS Format

N	Contents	Units	Byte Size	Data Type	Dim.
1	**Temperature variation of CEU board (24 GHz channel)**	10^{-2} K	4	sl	1
2	**Temperature variation of CEU board (36 GHz channel)**	10^{-2} K	4	sl	1
3	**Minimum and maximum Dicke load temperature (24 GHz channel)**	10^{-2} K	8	sl	2
4	**Minimum and maximum Dicke load temperature (36 GHz channel)**	10^{-2} K	8	sl	2

Table 14.6.24.1.2-1 MWR_CHD_AX Thermistor Limits GADS Format

N	Contents	Units	Byte Size	Data Type	Dim.
5	**Minimum and maximum hot load temperature (24 GHz channel)**	10^{-2} K	8	sl	2
6	**Minimum and maximum hot load temperature (36 GHz channel)**	10^{-2} K	8	sl	2
7	**Minimum and maximum mixer temperature (24 GHz channel)**	10^{-2} K	8	sl	2
8	**Minimum and maximum mixer temperature (36 GHz channel)**	10^{-2} K	8	sl	2
9	**Minimum and maximum IF module temperature (24 GHz channel)**	10^{-2} K	8	sl	2
10	**Minimum and maximum IF module temperature (36 GHz channel)**	10^{-2} K	8	sl	2
11	**Minimum and maximum receiver temperature (24 GHz channel)**	10^{-2} K	8	sl	2
12	**Minimum and maximum receiver temperature (36 GHz channel)**	10^{-2} K	8	sl	2
13	**Minimum and maximum expected brightness temperatures for channel 1**	10^{-2} K	4	us	2
14	**Minimum and maximum expected brightness temperatures for channel 2**	10^{-2} K	4	us	2
15	**Spares**	-	4	uc	4
TOTAL			**100**		

14.6.24.1.3 Receiver GADS

This GADS provides information related to the behavior of the receiver vs. on-board temperature and to the input noise temperature. The format of the GADS is shown in the table below.

Table 14.6.24.1.3-1 MWR_CHD_AX Receiver GADS Format

N	Description	Units	Byte Size	Data Type	Dim.
1	**Linear coefficient for gain vs. temperature response (24 GHz channel)**	10^{-5} 1/K	4	sl	1
2	**Quadratic coefficient for gain vs. temperature response (24 GHz channel)**	10^{-5} 1/K^{-2}	4	sl	1
3	**Linear coefficient for gain vs. temperature response (36 GHz channel)**	10^{-5} 1/K	4	sl	1
4	**Quadratic coefficient for gain vs. temperature response (36 GHz channel)**	10^{-5} 1/K^{-2}	4	sl	1
5	**Spares**	-	16	uc	16
TOTAL			**32**		

14.6.24.1.4 Characterization GADS

The format of the GADS is shown below. The GADS uses the structures mwr_char_info, mwr_mode_info_nominal, mwr_mode_info_redundant and mwr_drift_info, which are also defined below.

Table 14.6.24.1.4-1 MWR_CHD_AX Characterization GADS Format

N	Description	Units	Byte Size	Data Type	Dim.

1	**Channel characterization information for nominal mode**	-	760	mwr_mode_info_nominal	1
2	**Channel characterization information for redundant mode**	-	800	mwr_mode_info_redundant	1
TOTAL			**1560**		

The mwr_mode_info_nominal structure used above is defined in the table below.

Table 14.6.24.1.4-2 mwr_mode_info_nominal Structure

N	Description	Units	Byte Size	Data Type	Dim.
1	**Channel characterization information for the 24 GHz channel at 0 degrees C.**	-	76	mwr_char_info	1
2	**Channel characterization information for the 24 GHz channel at 10 degrees C.**	-	76	mwr_char_info	1
3	**Channel characterization information for the 24 GHz channel at 20 degrees C.**	-	76	mwr_char_info	1
4	**Channel characterization information for the 24 GHz channel at 30 degrees C.**	-	76	mwr_char_info	1
5	**Channel characterization information for the 24 GHz channel at 40 degrees C.**	-	76	mwr_char_info	1
6	**Channel characterization information for the 36 GHz channel at 0 degrees C.**	-	76	mwr_char_info	1
7	**Channel characterization information for the 36 GHz channel at 10 degrees C.**	-	76	mwr_char_info	1
8	**Channel characterization information for the 36 GHz channel at 20 degrees C.**	-	76	mwr_char_info	1
9	**Channel characterization information for the 36 GHz channel at 30 degrees C.**	-	76	mwr_char_info	1

	Channel characterization information for the 36 GHz channel at 40 degrees C.	-	76	mwr_char_info	1
TOTAL			**760**		

The mwr_mode_info_redundant structure used above is defined in the table below.

Table 14.6.24.1.4-3 mwr_mode_info_redundant Structure

N	Description	Units	Byte Size	Data Type	Dim.
1	**Channel characterization information for the 24 GHz channel at 0 degrees C.**	-	76	mwr_char_info	1
2	10	-	76	mwr_char_info	1
3	**Channel characterization information for the 24 GHz channel at 20 degrees C.**	-	76	mwr_char_info	1
4	**Channel characterization information for the 24 GHz channel at 30 degrees C.**	-	76	mwr_char_info	1
5	**Channel characterization information for the 24 GHz channel at 40 degrees C.**	-	76	mwr_char_info	1
6	**Channel characterization information for the 36 GHz channel at 0 degrees C.**	-	76	mwr_char_info	1
7	**Channel characterization information for the 36 GHz channel at 10 degrees C.**	-	76	mwr_char_info	1
8	**Channel characterization information for the 36 GHz channel at 20 degrees C.**	-	76	mwr_char_info	1
9	**Channel characterization information for the 36 GHz channel at 30 degrees C.**	-	76	mwr_char_info	1
10	**Channel characterization information for the 36 GHz channel at 40 degrees C.**	-	76	mwr_char_info	1

N	Description	Units	Byte Size	Data Type	Dim.
11	**36.5 GHz channel drift analysis**		28	mwr_drift_info	1
12	**Spare**	-	12	uc	12
TOTAL			**800**		

The mwr_char_info structure used above is defined in the table below:

Table 14.6.24.1.4-4 mwr_char_info Structure

N	Description	Units	Byte Size	Data Type	Dim.
1	**Look angle**	10^{-4} rad	4	sl	1
2	**Beam efficiency of main antenna**	10^{-2} %	4	sl	1
3	**Main Antenna Reflector trans. Coeff**	10^{-6}	4	sl	1
4	**Sky horn trans. coeff. for hot/cold switch [a_ch]**	10^{-6}	4	sl	1
5	**Hot load trans. coeff. for hot/cold switch [a_hc]**	10^{-6}	4	sl	1
6	**Measurement antenna transmission coeff. measure-calibration switch [a_a]**	10^{-6}	4	sl	1
7	**Calibration transmission coeff. measure-calibration switch [a_cal]**	10^{-6}	4	sl	1
8	**Measurement antenna transmission coeff. Dicke switch [a_m]**	10^{-6}	4	sl	1
9	**Calibration transmission coeff. Dicke switch [a_re]**	10^{-6}	4	sl	1
10	**Sky horn waveguides trans. coeff. [a_cw]**	10^{-6}	4	sl	1
11	**Measurement antenna waveguides trans. coeff. [a_r]**	10^{-6}	4	sl	1

12	**Sky horn feed trans. coeff. [a_cc]**	10^{-6}	4	sl	1
13	**Measurement antenna feed trans. coeff. [a_feed]**	10^{-6}	4	sl	1
14	**Sky horn isolation coefficient hot load calibration switch [b_ch]**	10^{-6}	4	sl	1
15	**Hot load isolation. coefficient for hot load switch [b_hc]**	10^{-6}	4	sl	1
16	**Measurement antenna isolation coeff. measure-calibration switch [b_a]**	10^{-6}	4	sl	1
17	**Calibration isolation coeff. measure-calibration switch [b_cal]**	10^{-6}	4	sl	1
18	**Measurement antenna isolation coeff. Dicke switch [b_m]**	10^{-6}	4	sl	1
19	**Calibration isolation coeff. Dicke switch [b_re]**	10^{-6}	4	sl	1
TOTAL			**76**		

The mwr_drift_info structure used above is defined in the table below:

Table 14.6.24.1.4-5 mwr_drift_info Structure

N	Description	Units	Byte Size	Data Type	Dim.
1	Date first day of the period during which the 36.5 GHz channel drift has been analysed (expressed in elapsed decimal day since 01/01/2000)	-	4	sl	1
2	Duration during which the drift has been analysed (expressed in days)	-	4	sl	1
3	count drop of the 36.5 GHz channel hot load during the analysed period	-	4	sl	1
4	count drop of the 36.5 GHz channel sky horn during the analysed period	-	4	sl	1
5	first parameter of the correction on the antenna count of the 36.5 GHz channel (derived from from the hot and cold calibration counts correction)	-	4	sl	1

6	second parameter of the correction on the antenna count of the 36.5 GHz channel (derived from from the hot and cold calibration counts correction)	-	4	sl	1
7	third parameter of the correction on the antenna count of the 36.5 GHz channel (derived from from the hot and cold calibration counts correction)	10^{-7}	4	sl	1
TOTAL			**28**		

14.6.25 MWR Processor Configuration File

This file contains data used to configure the MWR processor.

FILE ID: MWR_CON_AX

TYPE: Auxiliary

USE: Level 1B MWR processing

UPDATED: infrequently

SIZE: MPH(1247 bytes) + SPH(378 bytes) + GADS (40 bytes) = 1665 bytes.

14.6.25.1 Format

The file structure is shown in the table below:

MPH
Auxiliary Data SPH (as described in Volume 16) with 1 DSD *DSD pointing to the GADS*
GADS

The contents of the GADS are detailed in the following table.

Table 14.6.24.1.4-1 MWR Processor Configuration File

N	Description	Units	Byte Size	Data Type	Dim.
1	**File creation time**	MJD	12	mjd	1
2	**spare**	-	4	uc	4
3	**spare**	-	4	uc	4
4	**Moving window size** size of the gain and offset smoothing filter (min. value = 1, max. value = 188)	samples	2	us	1
5	**DSR validity threshold [0..7]**	-	2	us	1
6	**Processing error threshold**	10^{-2} %	4	fl	1
7	**Header error threshold**	10^{-2} %	4	fl	1
8	**Telemetry error threshold**	10^{-2} %	4	fl	1
9	**Pointing Configuration**	-	2	us	1
10	**Side lobe table**	-	2	us	1
TOTAL			**40**		

14.6.26 MWR Secondary Lobe Temperature File

This data base is necessary to retrieve the main lobe brightness temperature.In fact, it is used to extract the secondary lobe temperature as function of the orbit in terms of latitude, in order to retrieve the effective main lobe temperature. Its format is the following as provided by the costumer. It is a collection of values stored as latitude (in milli degrees) followed by the 24 GHz sidelobes temperature, then the 36 GHz sidelobe temperature. The latitude varies from -85 to +85 degrees. Total expected accuracy ≈ 3K; sidelobes temperature inaccuracy contribution < 1K.

FILE ID: MWR_SLT_AX

TYPE: Auxiliary

USE: Level 1B MWR processing

UPDATED: Infrequently

SIZE: MPH(1247 bytes) + SPH(378 bytes) + GADS(1854968 bytes) = 1856593 bytes

14.6.26.1 Format

The file structure is shown in the table below:

MPH
Auxiliary Data SPH (as described in Volume 16) with 1 DSD *DSD(G) pointing to the GADS*
GADS

The contents of the GADS are detailed in the following table.

Table 14.6.24.1.4-1 MWR Secondary Lobe Temperature File GADS Format

N	Description	Units	Byte Size	Data Type	Dim.
1	**Secondary Lobe Data Base Creation Time**	-	12	mjd	1
2	**Transmission coefficient of the reflector for Channel 1**	10^{-2}%	2	us	1
3	**Transmission coefficient of the reflector for Channel 2**	10^{-2}%	2	us	1
4	**Global secondary lobes contribution including cosmic background, sun and satellite contributions, for channel**	10^{-3}K	2	us	1

Table 14.6.24.1.4-1 MWR Secondary Lobe Temperature File GADS Format

N	Description	Units	Byte Size	Data Type	Dim.
	1				
5	**Global secondary lobes contribution including cosmic background, sun and satellite contributions, for channel 2**	10^{-3}K	2	us	1
6	**Eta_earth for channel 1** Efficiency factor for earth contribution on the secondary lobes for channel 1	10^{-6} %	4	sl	1
7	**Eta_earth for channel 2** Efficiency factor for earth contribution on the secondary lobes for channel 2	10^{-6} %	4	sl	1
8	**Start Latitude** Upper limit of the latitude range of data base validity (-90)	10^{-6} deg	4	sl	1
9	**Stop Latitude** Bottom limit of the latitude range of data base validity (+90)	10^{-6} deg	4	sl	1
10	**Latitude step** Step of the of data base data (10)	10^{-6}deg	4	sl	1
11	**Secondary Lobes (24 GHz)** 18 real numbers representing the secondary lobes contribution to the brightness temperature	K	72	fl	18
12	**Secondary Lobes (36 GHz)** 18 real numbers representing the secondary lobes contribution to the brightness temperature	K	72	fl	18
13	**Efficiency factor for sun contribution on the secondary lobes for Channel 1**	10^{-6}%	4	sl	1
14	**Efficiency factor for sun contribution on the secondary lobes for Channel 2**	10^{-6}%	4	sl	1
15	**Sun secondary lobes contribution for Channel 1**	10^{-3}K	4	sl	1
16	**Sun secondary lobes contribution for Channel 2**	10^{-3}K	4	sl	1

Table 14.6.24.1.4-1 MWR Secondary Lobe Temperature File GADS Format

N	Description	Units	Byte Size	Data Type	Dim.
17	**Efficiency factor for sky contribution on the secondary lobes for Channel 1**	10^{-6}%	4	s1	1
18	**Efficiency factor for sky contribution on the secondary lobes for Channel 2**	10^{-6}%	4	s1	1
19	**Sky secondary lobes contribution for Channel 1**	10^{-6}K	4	sl	1
20	**Sky secondary lobes contribution for Channel 2**	10^{-6}K	4	sl	1
21	**Efficiency factor for satellite contribution on the secondarylobes for Channel 1**	10-6%	4	sl	1
22	**Efficiency factor for satellite contribution on the secondarylobes for Channel 2**	10^{-6} %	4	sl	1
23	**Start Longitude - Upper limit of the latitude range of database validity (-180)**	10^{-6}deg	4	sl	1
24	**StopLongitude - Upper limit of the latitude range of database validity (+179)**	10^{-6}deg	4	sl	1
25	**Longitude step - Step of the of data base data (+1)**	10^{-6}deg	4	sl	1
26	**Start Latitude - Upper limit of the latitude range of data base validity (-80)**	10^{-6}deg	4	sl	1
27	**Stop Latitude - Bottom limit of the latitude range of data base validity (+80)**	10^{-6}deg	4	sl	1
28	**Latitude step - Step of the of data base data (+1)**	10^{-6}deg	4	sl	1
29	**Earth secondary lobes contribution for Channel 1 (Spring) ordered by latitude and longitude**	K	231840	fl	57960
30	**Earth secondary lobes contribution for Channel 1 (Summer) ordered by latitude and longitude**	K	231840	fl	57960

Table 14.6.24.1.4-1 MWR Secondary Lobe Temperature File GADS Format

N	Description	Units	Byte Size	Data Type	Dim.
31	**Earth secondary lobes contribution for Channel 1 (Autumn) ordered by latitude and longitude**	K	231840	fl	57960
32	**Earth secondary lobes contribution for Channel 1 (Winter) ordered by latitude and longitude**	K	231840	fl	57960
33	**Earth secondary lobes contribution for Channel 2 (Spring) ordered by latitude and longitude**	K	231840	fl	57960
34	**Earth secondary lobes contribution for Channel 2 (Summer) ordered by latitude and longitude**	K	231840	fl	57960
35	**Earth secondary lobes contribution for Channel 2 (Autumn) ordered by latitude and longitude**	K	231840	fl	57960
36	**Earth secondary lobes contribution for Channel 2 (Winter) ordered by latitude and longitude**	K	231840	fl	57960
TOTAL			**1854968**		

14.6.27 MWR Land/Sea Flag Table File

This file contains the values of the land/sea flag.The values are recorded on a regular grid. The coverage of the grid is from 0 minutes to 21598 minutes in longitude and from -5400 minutes to 5398 minutes in latitude. The resolution of the grid is 2 minutes in longitude and 2 minutes in latitude. One value is recorded at each gridpoint.

FILE ID:MWR_LSF_AX

TYPE:Auxiliary

USE: Level 2 RA2/MWR processing

UPDATED:infrequently

SIZE:MPH(1247 Bytes) + SPH(658Bytes) + GADS(55.62 MBytes)

14.6.27.1 Format

The file structure is shown in the table below:

MPH
Auxiliary Data SPH (as described in Volume 16) with 2 DSDs *DSD pointing to the General GADS* *DSD pointing to the Grid Data GADS*
General GADS
Data GADS

The contents of the GADS are detailed in the following table.

14.6.27.1.1 Header GADS

The general GADS shall follow the format described in Table 14.6.6.1.1-1

14.6.27.1.2 Data GADS

The land/sea flag has the following meanings:

0: oceans or semi-enclosed seas
1: enclosed seas or lakes

2: continental ice

3: land

Each record corresponds to a longitude value. The first record corresponds to the first value of the longitude, and the last record is relative to the last value of the longitude. The contents of one record are detailled in the following table:

Table 14.6.27.1.2-1 MWR_LSF_AX Data GADSR Format

N	Description	Units	Byte Size	Data Type	Dim.
1	**Land/Sea flag at** φf	-	1	sc	1
2	**Land/Sea flag at** φf+dφ		1	sc	1
	...				1
5400	**Land/Sea flag at** φl		1	sc	1
TOTAL			**5400**		

Where φ_f, φ_l, and dφ, are respectively, the latitude of the first point, the latitude of the last point and the grid resolution in latitude.

14.6.28 Altitude of Meteorological grid points File

This file contains the altitude of meteorological grid points. The values are recorded on a regular grid. The coverage of the grid is from 0 to 359 degrees in longitude and from 90 to -90 degrees in latitude. The resolution of the grid is 1 degree in longitude and 1 degree in latitude.

FILE ID: RA2_MET_AX

TYPE: Auxiliary

USE: Level 2 RA-2 processing

UPDATED: Infrequently

SIZE: MPH(1247 bytes) + SPH(378 bytes) + GADS(130320 bytes) = 131945 bytes.

14.6.28.1 Format

The file structure is shown in the table below:

MPH
Auxiliary Data SPH (as described in Volume 16) with 1 DSD: *DSD pointing to the Grid Data GADS*
Grid Data GADS

14.6.28.1.1 Grid Data GADS

This GADS contains only one record made by 65160 values, which corresponds to the 360*181 grid points of the meteorological grid found in the meteorological data. The first integer value is for grid point located at 90° latitude North, 0° longitude. The second is for grid point located at 90° latitude North, 1° longitude. The last (65160th) value is for grid point located at -90° latitude South, 359° longitude.

Table 14.6.28.1.1-1 RA2_MET_AX Grid Data GADS Format

N	Description	Units	Byte Size	Data Type	Dim.
1	**Altitude of Meteo. grid point** at lat. 90° N, long. 0° **Altitude of Meteo. grid point** at lat. 90° N, long. 1° .... **Altitude of Meteo. grid point** at lat. -90° S, long. 359°	m	130320	us	65160

TOTAL		**130320**		

14.6.29 ECMWF Data Files

These files are common to many instruments and are hence defined in Volume 16.

14.6.30 Orbit State vectors

The Orbit State Vectors files available from the FOS, and DOR_POR_AX and DOR_VOR_AX products are defined in Volume 16.

14.6.31 ENVISAT-1 Attitude Data File

The ENVISAT-1 Attitude data file is common to many instruments and is thus described in Volume 16.

PAGE INTENTIONALLY LEFT BLANK

14.7 PRODUCT SUMMARY SHEETS

The data on the following pages is extracted from the product summary information contained in the DDT data base.

RA-2 IF Calibration and BITE Mode Level 0

PRODUCT ID	**RA2_CAL_0P**
PRODUCT NAME	**RA-2 IF Calibration and BITE Mode Level 0**
DESCRIPTION	**This product contains time ordered AISPs acquired while the instrument is in IF Calibration or BITE Modes. In IF Calibration mode the instrument collects thermal noise samples to get an estimate of the IF filter shape. Digital BITE mode is used to verify the Tx/Rx chain and on-board digital processing. The product is produced systematically when the instrument data is IF Calibration or BITE data. No further PDS products are created directly from this product.**
APPLICATIONS	**The primary application of this data is instrument monitoring and calibration.**
DELIVERY TIME	**The NRT version is available from the PDHS 3 hours after data acquisition. The OFL (fully consolidated) version of the product is available from the LRAC 2 weeks after acquisition.**
COVERAGE	**No geographical coverage -- on-board monitoring product.**

THROUGHPUT **products created infrequently**

PRODUCT SIZE **1 MB maximum / orbit**

GEOMETRICAL SAMPLING **N/A**

GEOMETRIC RESOLUTION **N/A**

GEOMETRIC ACCURACY
N/A RADIOMETRIC
RESOLUTION N/A

RADIOMETRIC ACCURACY **N/A**
AUXILIARY DATA **Orbit state vectors; Time correlation parameters.**
ALGORITHMS USED **Satellite positioning; time correlation.**

RA-2 Measurement Mode Level 0

PRODUCT ID **RA2_ME__0P**

PRODUCT NAME **RA-2 Measurement Mode Level 0**

DESCRIPTION **This product contains time ordered, annotated Instrument Source Packets from the nadir pointing, pulse limited radar altimeter, which is used to measure sea level and land topography along the satellite ground track. It is the nominal Level 0 product for the RA-2 instrument.**

APPLICATIONS **Archived product forming basis for all higher level processing.**

DELIVERY TIME **Product available from PDHS within 3 hours from data take. Available from the LRAC starting 2 weeks after acquisition.**

COVERAGE **Full orbit**

THROUGHPUT **1 product per orbit.**

PRODUCT SIZE **aprrox. 5400 source packets x 12111 bytes/packet + header = max 75 MB/orbit**

GEOMETRICAL SAMPLING	**measurements approx. 390 m along track. Vertical altitude range : 764 to 825 km, Wave height range 0.125 m to 5 m.**
GEOMETRIC RESOLUTION	**horizontal: approx. 19 km per measurement. Vertical: maximum of 48.9 cm at max. BW of 320 MHz.**
GEOMETRIC ACCURACY	**vertical: Altitude accuracy < 4.5 cm, Wave height < 5% or 6 cm**
RADIOMETRIC RESOLUTION	**Range of cross section over ocean: -10 to 50 dB**
RADIOMETRIC ACCURACY	**Accuracy of cross section over ocean: 0.2 dB**
AUXILIARY DATA	**Orbit state vectors; Time correlation parameters.**
ALGORITHMS USED	**Satellite positioning; Time correlation**
NOTES	**Created systematically when data received from the instrument is Measurement Mode data.**

RA-2 Geolocated and Calibrated Altimeter Waveforms with TOA Microwave Brigtness Temperature

PRODUCT ID	**RA2_MW__1P**
PRODUCT NAME	**RA-2 Geolocated and Calibrated Altimeter Waveforms with TOA Microwave Brigtness Temperature**
DESCRIPTION	**This is the basic level 1B product for RA-2 which is used as the foundation product for all subsequent RA-2 products. It contains RA-2 data calibrated and converted to engineering units. It also contains some auxiliary data needed for higher level processing.**
APPLICATIONS	**Engineering foundation product enabling the derivation (via higher level processing) of altitude, wind and wave parameters**
DELIVERY TIME	**NRT product available within 3 hours from data take. OFL product available from the LRAC starting 2 weeks after data take.**
COVERAGE	**Pole to pole, half orbit**
THROUGHPUT	**2 products per orbit.**

PRODUCT SIZE	**34 to 43 MB (depending on whether burst mode data is included)**
GEOMETRICAL SAMPLING	**measurements approx. 390 m along track. Vertical altitude range : 764 to 825 km, Wave height range 0.125 m to 5 m.**
GEOMETRIC RESOLUTION	**horizontal: approx. 19 km per measurement. Vertical: maximum of 48.9 cm at max. BW of 320 MHz.**
GEOMETRIC ACCURACY	**vertical: Altitude accuracy < 4.5 cm, Wave height < 5% or 6 cm**
RADIOMETRIC RESOLUTION	**Range of cross section over ocean: -10 to 50 dB**
RADIOMETRIC ACCURACY	**Accuracy of cross section over ocean: 0.2 dB**
AUXILIARY DATA	**Orbit state vectors; Time correlation parameters; MWR Level 1B data; Burst Waveforms MDS, PTR Data**
ALGORITHMS USED	**Decoding of Level 0 data; Reading Auxilary data files; Calibration data processing and datation; Science data processing and datation; Science data validation; output product generation.**
NOTES	**Created systematically from the Level 0 Measurement mode product.**

RA-2 Geophysical Data Record products

PRODUCT ID		**RA2_FGD_2P**
	or	**RA2_IGD_2P**
	or	**RA2_GDR_2P**
PRODUCT NAME		**RA-2 Fast Delivery Geophysical Data Record**
		or RA-2 Intermediate Geophysical Data Record
		or RA-2 Geophysical Data Record
DESCRIPTION		**These products contain wind-speed, wave height, range and orbital altitude measurements along with water vapour measurements from the MWR.**
APPLICATIONS		**Measurement of ocean surface winds and waves, water vapour.**

DELIVERY TIME	**The FDGDR is available from the PDHS 3 hours after data acquisition. The IGDR is processed off-line and is available 3-5 days after data acquisiton. The GDR is available 50 days after data acquisition.**
COVERAGE	**Pole to pole, half orbit**
THROUGHPUT	**2 products of each type per orbit**
PRODUCT SIZE	**7 MB/ product**
GEOMETRICAL SAMPLING	**measurements approx. 390 m along track. Vertical altitude range : 764 to 825 km, Wave height range 0.125 m to 5 m.**
GEOMETRIC RESOLUTION	**horizontal: approx. 19 km per measurement. Vertical: maximum of 48.9 cm at max. BW of 320 MHz.**
GEOMETRIC ACCURACY	**vertical: Altitude accuracy < 4.5 cm, Wave height < 5% or 6 cm**
RADIOMETRIC RESOLUTION	**Range of cross section over ocean: -10 to 50 dB**
RADIOMETRIC ACCURACY	**Accuracy of cross section over ocean: 0.2 dB**
AUXILIARY DATA	**Orbit state vectors; time correlation parameters; MWR MDS**
ALGORITHMS USED	**independent processing by 4 retrackers range estimation geophysical parameters estimation validation**
NOTES	**The product is produced systematically from the Level 1B product. The N version is processd systematically using DORIS Navigator orbit estimation and the NRT Level 1B product. The P version is processed systematically using DORIS preliminary orbit estimation and the OFL Level 1B product. The V (fully consolidated) version is processed systematically using the DORIS Precise orbit estimation and the OFL Level 1B product.**

RA-2 Sensor Data Record

PRODUCT ID	**RA2_MWS_2P**
PRODUCT NAME	**RA-2 Sensor Data Record**
DESCRIPTION	**This product contains the OFL geophysical Data Record augmented with waveforms and associated parameters from the OFL Level 1B product. It is the most complete and precise RA-2 product produced.**
APPLICATIONS	**Scientific applications requiring extremely precise RA-2 data**
DELIVERY TIME	**Available within 50 days after acquisition**
COVERAGE	**Pole to pole, half orbit**
THROUGHPUT	**2 passes (products) per orbit**
PRODUCT SIZE	**31 to 40 MB (depending on burst waveforms)**
GEOMETRICAL SAMPLING	**measurements approx. 390 m along track. Vertical altitude range : 764 to 825 km, Wave height range 0.125 m to 5 m.**
GEOMETRIC RESOLUTION	**horizontal: approx. 19 km per measurement. Vertical: maximum of 48.9 cm at max. BW of 320 MHz.**
GEOMETRIC ACCURACY	**vertical: Altitude accuracy < 4.5 cm, Wave height < 5% or 6 cm**
RADIOMETRIC RESOLUTION	**Range of cross section over ocean: -10 to 50 dB**
RADIOMETRIC ACCURACY	**Accuracy of cross section over ocean: 0.2 dB**
AUXILIARY DATA	**Orbit state vectors; time correlation parameters; MWR MDS (from the GDR product) 18 Hz Waveforms MDS Burst Waveforms MDS**
ALGORITHMS USED	**same as for the Geophysical Data Record fully consolidated product and the**

	Level 1B fully consolidated product
NOTES	**This product is produced sytematically from the OFL Level 1B product and the OFL Geophysical Data Record product.**

RA-2 wind/wave product for Meteo users

PRODUCT ID	**RA2_WWV_2P**
PRODUCT NAME	**RA-2 wind/wave product for Meteo users**
DESCRIPTION	**This product will be very close to the same structure as the ERS-1 and ERS-2 fast delivery product URA. It is available in Near Real Time and contains wind speed, wave height and range.**
APPLICATIONS	**Measurement of ocean surface winds and waves, water vapour.**
DELIVERY TIME	**The product FDMAR extracted from the FDGDR product is available after 3 hours of data take while the product IMAR extracted from the IGDR is available 3-5 days after acquisition.**
COVERAGE	**North pole to North pole, full orbit.**
THROUGHPUT	**1 product per orbit (100')**
PRODUCT SIZE	**Approx. 2 MB/ orbit.**
GEOMETRICAL SAMPLING	**measurements approx. 390 m along track. Vertical altitude range : 764 to 825 km, Wave height range 0.125 m to 5 m.**
GEOMETRIC RESOLUTION	**horizontal: approx. 19 km per measurement. Vertical: maximum of 48.9 cm at max. BW of 320 MHz.**
GEOMETRIC ACCURACY	**vertical: Altitude accuracy < 4.5 cm, Wave height < 5% or 6 cm** **Range of cross section over ocean: -10 to 50 dB**
RADIOMETRIC RESOLUTION	
RADIOMETRIC ACCURACY	**Accuracy of cross section over ocean: 0.2 dB**
AUXILIARY DATA	**Orbit state vectors; time correlation parameters; others TBD**

ALGORITHMS USED	**Information not available. Thought to be simply an extraction process from the Geophysical Data record product**
NOTES	**Produced systematically from the NRT version of the Geophysical Data Record. May be converted to BUFR format outside the PDS for distribution to Meteo users.**

DISTRIBUTION LIST

NAME	COPY	NAME	COPY